User's Manual

CA150
HANDY CAL

IM CA150E

YOKOGAWA

Yokogawa Test & Measurement Corporation

IM CA150E
7th Edition: Oct. 2017 (YMI)

Introduction

Thank you for purchasing the CA150 HANDY CAL.
This User's manual contains useful information regarding the instrument's functions and operating procedures, as well as precautions that should be observed during use.
Before using this product, thoroughly read this manual to understand how to use it properly.

Manual

Contact information of Yokogawa offices worldwide is provided on the following sheet.

PIM 113-01Z2	Inquiries	List of worldwide contacts

Notes

- The information contained in this manual is subject to change without notice. Furthermore, the actual display items may differ slightly from the ones appearing in this manual.
- Every effort has been made to ensure the information contained herein is accurate. However, should any concerns, errors, or emissions come to your attention, or if you have any comments, please contact us.
- Copying or reproduction of any or all of the content of this manual without YOKOGAWA's permission is strictly prohibited.

Trademark Acknowledgments

- Company names and product names mentioned herein may be trademarks or registered trademarks of their respective companies.

Revision Information

1st Edition: October 2006
2nd Edition: April 2007
3rd Edition: October 2008, February 2009
4th Edition: July 2009
5th Edition: October 2013
6th Edition: May 2015
7th Edition: October 2017

Disk No. CA150E
7th Edition: October 2017 (YMI)
All Rights Reserved. Copyright ©
2006, Yokogawa Meters & Instruments Corporation
2017, Yokogawa Test & Measurement Corporation
Printed in Japan

Checking the Contents of the Package

After opening the package, check the following items before use. If the product is not the one you ordered, any item is missing, or there is a visible defect, contact the dealer from whom you purchased the instrument.

Main Unit

Check that the model name given on the name plate on the back panel of the instrument matches the one on your order.

• Model

Model
CA150

• Serial No.

Should you need to contact the dealer from whom you purchased the instrument, have your unit's serial number handy to give to the person.

Standard Accessories

The following standard accessories are supplied with the instrument. Make sure that all items are present and undamaged.

Source lead cables (98020)

Measurement lead cables (RD031)

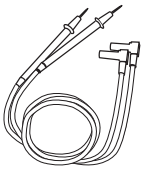

Carrying case (93026)

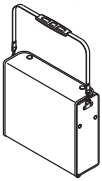

Fuse (A1566EF)

Terminal adapter (99022)

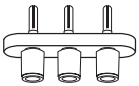

AA-size alkaline batteries (six)

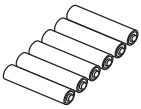

User's Manual (IM CA150E)

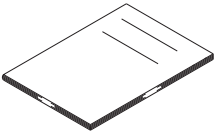

Ferrite core (A1193MN) two

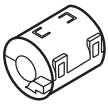

Optional Accessories

The following optional accessories are available. Upon receiving these optional accessories, make sure that all the items you ordered have been supplied and are undamaged.
If you have any questions regarding optional accessories, or if you wish to place an order, contact the dealer from whom you purchased the instrument.

Name	Model	Remarks
AC adapter	94010-D	UL/CSA standard
	94010-F	VDE standard
	94010-R	SAA standard
	94010-S	BS standard
	94010-H	GB standard
	94010-P	KC standard
	94010-N	NBR standard
NiMH battery	94015	
RJ sensor	B9108WA	For reference junction compensation
Main body case	93027	With strap and accessories case
Accessories case	B9108XA	

Make sure that the attached power cord meets the designated standards of the country and area that you are using it in.

Optional Spare Parts

Name	Model	Remarks
Source lead cables	98020	Lead Cable for Source
Measurement lead cables	RD031	Safety Test Lead
Carrying case	93026	
Terminal adapter	99022	Used for temperature measurement
Fuse	A1566EF	Set of 10 fuses

AC adapter

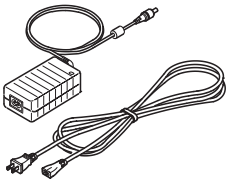

Accessories case

RJ sensor

Safety Precautions

This product is designed to be used by a person with specialized knowledge. When operating the instrument, be sure to observe the cautionary notes given below to ensure correct and safe use of the instrument. If you use the instrument in any way other than as instructed in this manual, the instrument's protective measures may be impaired.
This manual is an essential part of the product; keep it a safe place for future reference.
YOKOGAWA is by no means liable for any damage resulting from use of the instrument in contradiction to these cautionary notes.

The following safety symbols are used on the instrument and in the manual:

⚠ Danger! Handle with Care.

This symbol indicates that the operator must refer to an explanation in the User's Manual or Service Manual in order to avoid risk of injury or loss of life of personnel or damage to the instrument.

⎓ This symbol indicates a direct current (DC).

⏽ This symbol indicates a power source.

⚠ WARNING

Indicates a hazard that may result in the loss of life or serious injury of the user unless the described instruction is abided by.

⚠ CAUTION

Indicates a hazard that may result in an injury to the user and/or physical damage to the product or other equipment unless the described instruction is abided by.

NOTE

Indicates information that is essential for handling the instrument or should be noted in order to familiarize yourself with the instrument's operating procedures and/or functions.

Tip

Indicates additional information to complement the present topic.

Be sure to comply with the following safety precautions.
Failure to do so may result in loss of life or injury to personnel from such hazards as electrical shock, or damage to the instrument.

⚠ WARNING

- **Use the instrument Only for Its Intended Purpose**
  This instrument is for generating (sourcing)/measuring DC voltage or current. (This instrument is for generating/measuring resistance or temperature (thermocouple used).)
  Do not use this instrument for other purpose.
- **Check the Physical Appearance**
  Do not use the instrument if there is a problem with its physical appearance.
- **Prohibition of Use in Gaseous Environments**
  Do not operate the instrument in the presence of inflammable and explosive gases or vapors. Operating the instrument in such an environment is extremely hazardous.
- **Protection Feature Defects**
  Do not operate the instrument if a fuse or other protection feature is defective. Before commencing operation, make sure that protection features are free from defects.
- **External Connections**
  When connecting the instrument to the object to be tested or an external control circuit, or if you need to touch any external circuit, turn off the power to the circuit and make sure that no voltage is generated.
- **Fuses**
  To prevent a fire, be sure to use fuses with the specified ratings (voltage, current, and type). Do not short-circuit the fuse holder.
- **Correct Use of Lead Cables**
  Be sure to correctly use the measurement lead cables (model: RD031) and source lead cables (model: 98020) without mistaking them.
- **Do Not Remove the Casing or Disassemble**
  Only Yokogawa service personnel are authorized to remove the casing or disassemble or modify the instrument. Do not attempt to repair the instrument yourself, as doing so is extremely dangerous.
  Some parts inside the instrument are extremely dangerous because they use a high voltage.
  When the instrument needs an internal inspection or calibration, contact YOKOGAWA or the dealer from whom you purchased the instrument.

To use the AC adapter (optional) safely, be sure to comply with the following precautions.

⚠ WARNING

- **Make sure that the rated power supply voltage of the instrument matches the voltage of the power supply before turning on the power.**
- **To prevent the possibility electrical shock or fire, be sure to use the AC adapter and the power cord supplied by YOKOGAWA.**
  Additionally, do not use the AC adapter and the power code supplied with this instrument with another instrument.

  Do not place anything on the AC adapter or power cord, and prevent heat sources from coming into contact with them.
  When unplugging the power cord from the outlet, be sure to hold the plug and never pull the actual cord.
- **If the power cord is damaged, contact your dealer.**

⚠ CAUTION

The instrument is for domestic use (Class B) and meets the electromagnetic compatibility requirements.

Précautions d’emploi

Ce produit est conçu pour être utilisé par une personne ayant des connaissances spécialisées.
Dans le cadre de l'utilisation de cet instrument, s'assurer de respecter les mises en garde indiquées ci-dessous pour garantir une utilisation correcte et sans danger de l'instrument. Si vous utilisez l'appareil d'une autre manière que celle indiquée dans ce manuel, il est possible que cela endommage les dispositifs de protection.
Ce manuel est une partie essentielle du produit ; le conserver dans un endroit sûr pour une référence ultérieure.
YOKOGAWA ne saurait en aucun cas être déclaré responsable de tout dommage résultant d'une utilisation de l'instrument ne respectant pas ces mises en garde.

Symboles utilisés sur les appareils et dans le manuel d’instruction:

⚠ Danger ! Manipuler avec soin.

Ce symbole indique que l’opérateur doit se reporter à une explication donnée par le manuel utilisateur, afin d’éviter tout accident susceptible de provoquer des blessures au personnel qui peuvent éventuellement s’avérer mortelles, ou de protéger l’appareil.

⎓ Ce symbole indique une intensité CC.

⏀ Ce symbole indique une source d’alimentation.

⚠ Avertissement

Indique un danger. Attire l’attention sur une utilisation qui pourrait engendrer des accidents susceptibles de provoquer des blessures qui peuvent éventuellement s’avérer mortelles.

⚠ Attention

Indique un danger. Attire l’attention sur une utilisation qui pourrait engendrer une blessure personnelle et/ou être préjudiciable au produit.

Remarque

Indique les informations essentielles à la manipulation de l’instrument ou qui doivent être prises en compte afin de vous familiariser avec les procédures d’utilisation et/ou les fonctions de l’instrument.

Astuce

Indique les informations complémentaires au présent sujet.

Les précautions suivantes doivent être prises. Dans le cas contraire, des accidents susceptibles de provoquer des blessures qui peuvent éventuellement s’avérer mortelles résultant de dangers tels que des chocs électriques, ou un préjudice au produit, risquent de survenir.

⚠ Avertissement

- **Utiliser cet instrument uniquement pour l’usage auquel il est destiné.**
  Cet instrument est destiné à produire (générer)/mesurer du courant ou une tension CC. (Cet instrument sert à produire/mesurer la résistance ou la température (thermocouple utilisé).)
  Ne pas utiliser cet instrument pour un autre usage.
- **Vérifier l’aspect physique**
  Ne pas utiliser cet instrument si son aspect physique présente un problème.
- **Interdiction d’utilisation dans une atmosphère gazeuse.**
  Ne pas utiliser l’instrument dans un endroit qui renferme des gaz/vapeurs inflammables ou explosifs. Il est extrêmement dangereux d’utiliser l’instrument dans une telle atmosphère.
- **Défauts du dispositif de protection**
  Ne pas utiliser l’instrument si un fusible ou tout autre dispositif de protection est défectueux. Avant de mettre l’instrument sous tension, toujours s’assurer que les dispositifs de protection sont exempts de tout défaut.
- **Connexions externes**
  Mettre le circuit hors tension et veiller à ce qu’aucune tension ne soit générée lors du branchement de l’instrument à l’objet devant être mesuré ou à un circuit de commande externe, ou lors du réglage de tout circuit externe.
- **Fusibles**
  Veiller à n’utiliser que des fusibles aux pouvoirs de rupture déterminés (tension, intensité et type) afin d’éviter tout risque d’incendie. Ne pas court-circuiter le porte-fusible.
- **Utilisation correcte des câbles sous plomb**
  Veiller à utiliser correctement les câbles sous plomb de mesure (modèle : RD031) et les câbles source sous plomb (modèle : 98020) sans les confondre.
- **Ne pas retirer le boîtier ou le démonter**
  Ne pas retirer le boîtier de l’instrument et ne pas essayer non plus de démonter/modifier l’instrument lui-même. L’instrument renferme des composants parcourus par des tensions élevées ce qui les rend extrêmement dangereux. Pour un contrôle interne ou un étalonnage de l’instrument, contacter YOKOGAWA ou le revendeur auprès duquel a été acheté l’instrument.

Pour une utilisation sécurisée de l’adaptateur secteur (optionnel), respecter les précautions suivantes.

⚠ Avertissement

- **Avant de mettre l’instrument sous tension, s’assurer que sa tension assignée correspond à celle de la source d’alimentation.**
- **Pour éviter tout choc électrique ou incendie, s’assurer d’utiliser l’adaptateur secteur et le cordon d’alimentation fournis par YOKOGAWA.**
  Ne pas non plus utiliser l’adaptateur secteur et le cordon d’alimentation fournis avec cet instrument avec un autre instrument.
  Ne placer aucun objet sur l’adaptateur secteur ou le cordon d’alimentation, et éviter que des sources de chaleur entrent en contact avec ces derniers.
  Pour débrancher le cordon d’alimentation de la prise, s’assurer de tirer sur la fiche, et jamais sur le cordon lui-même.
- **Si le cordon d’alimentation est endommagé, prendre contact avec votre revendeur.**

⚠ Attention

Cet instrument est destiné à un usage domestique (classe B) et respecte les exigences en matière de compatibilité électromagnétique.

3.2.1 Utilisation de batteries alcalines

⚠ Attention

Insérer les batteries en positionnant leurs électrodes positives et négatives correctement, comme indiqué sur le support.

3.2.2 Utilisation d'un adaptateur secteur

⚠ Avertissement

- **Pour éviter tout choc électrique ou incendie, s'assurer d'utiliser l'adaptateur secteur et le cordon d'alimentation fournis par YOKOGAWA. Ne pas non plus utiliser l'adaptateur secteur et le cordon d'alimentation fournis avec cet instrument avec un autre instrument.**
- **S'assurer que la tension d'alimentation correspond à la tension d'alimentation nominale avant de brancher le cordon d'alimentation.**

3.2.3 Utilisation d'une batterie NIMH

S'assurer de respecter les avertissements suivants à propos de la manipulation de la batterie NiMH.

⚠ Avertissement

- **La solution d'électrolyte contenue dans la batterie NiMH est alcaline. Si la solution entre en contact avec un vêtement ou la peau suite à une fuite ou à une rupture de la batterie, cela peut endommager le vêtement ou la peau. En particulier, si la solution entre en contact avec un œil, cela peut entraîner une baisse de l'acuité visuelle. Dans ce cas, ne pas frotter l'œil affecté, mais le rincer soigneusement et immédiatement à l'eau claire. Puis consulter rapidement un médecin pour qu'il prescrive un traitement.**
- **Lors du remplacement de la batterie NiMH, toujours placer l'interrupteur d'alimentation de l'instrument en position d'arrêt et débrancher le cordon d'alimentation de l'adaptateur secteur de la prise pour éviter tout danger potentiel, tel qu'un court-circuit ou un choc électrique.**
- **Ne pas utiliser d'autre batterie que celle fournie par YOKOGAWA (modèle : 94015).**
- **Ne pas laisser la batterie NiMH à la lumière directe du soleil, dans un véhicule par forte chaleur ou près d'un feu. Sinon, cela pourrait causer une fuite de la solution ou une détérioration de la performance et/ou durée de vie de la batterie.**
- **Ne pas démonter ni modifier la batterie NiMH, car les dispositifs de protection de la batterie pourraient être endommagés, et causer une surchauffe ou une rupture.**
- **Ne pas court-circuiter la batterie NiMH, car cela pourrait causer des brûlures dues à la surchauffe de la batterie.**
- **Ne pas jeter la batterie au feu et ne pas y appliquer de chaleur. Sinon il existe un risque de rupture ou de fuite de la solution d'électrolyte.**
- **Ne pas faire subir de choc excessif à la batterie, par exemple en la jetant. Cela pourrait causer une fuite de la solution, une surchauffe ou une rupture de la batterie.**

- **Ne pas utiliser de batterie défectueuse, comme par exemple une batterie présentant une fuite de solution, une batterie déformée, décolorée ou présentant toute autre anomalie.**
- **Éviter tout contact de la batterie avec du métal lors du transport, car il existe un risque de court-circuit.**
- **Ne pas immerger la batterie dans l'eau et ne pas la mouiller. Sinon, elle pourrait surchauffer ou rouiller, ce qui entraînerait une perte de ses fonctions.**

Si la batterie n'est pas utilisée pendant une longue période, la retirer de l'instrument et la stocker dans le type d'environnement suivant.

Période de stockage d'un an ou moins :

Température de -20 à 35°C (emplacements avec humidité faible)

Période de stockage de 3 mois ou moins :

Température de -20 à 45°C (emplacements avec humidité faible)

⚠ Avertissement

S'assurer d'utiliser le CA150 pour charger la batterie NiMH. Charger la batterie NiMH dans un environnement où la température se trouve entre 10 et 35°C. Charger la batterie à une température ne se trouvant pas dans la plage ci-dessus peut avoir pour conséquence une charge insuffisante, une fuite de solution ou une surchauffe.

⚠ Attention

- **Les opérations de production ou de mesure sont possibles pendant la charge, mais leur précision est affectée par la chaleur générée par la charge.**
  Pour assurer une mesure (production) précise, il est recommandé de ne pas utiliser la fonction de charge au même moment.
- **Pour en savoir plus sur l'effet de la génération de la chaleur sur la précision (ajout de coefficient de température), consulter les caractéristiques techniques.**
- **Il est recommandé de procéder aux opérations de production et de mesure une fois la charge achevée (après un délai de 2 heures au moins).**

3.2.4 Fusible

⚠ Attention

S'assurer d'utiliser le fusible désigné.

3.3.1 Mettre l’instrument sous et hors tension

⚠ Attention

Lorsque l’instrument est sous tension, vérifier qu’il fonctionne normalement.

3.4 Environnement de fonctionnement

Catégorie de mesure

⚠ Avertissement

Ne pas utiliser le CA150 pour les mesures dans les endroits qui appartiennent aux catégories de mesure II, III, et IV.

4. Source

⚠ Avertissement

Pour éviter tout risque de choc électrique, ne pas appliquer de tension de 30 V ou plus aux bornes de sortie.
S’assurer également que la tension à la masse ne dépasse pas 30 V.
S’assurer d’utiliser les câbles de dérivation fournis.

⚠ Attention

N’appliquer aucune tension aux bornes de sortie pour des plages ne correspondant pas à 20 mA COLLECTEUR. Sinon, le circuit interne pourrait être endommagé.
La composante de chute de tension due à la résistance (environ 0,1 Ω pour un aller-retour) des câbles de dérivation se transforme en erreur sur l’instrument.

Précaution pour brancher les bornes de sortie

⚠ Attention

Serrer l’écrou de la borne de sortie à la main.
Ne pas utiliser d’outils ou d’objets similaires. Serrer l’écrou avec un outil ou objet similaire pourrait endommager la borne, et causer le dysfonctionnement de la production normale.
Avant de stocker l’instrument dans son étui de transport, resserrer l’écrou de la borne de sortie.
Si l’instrument est stocké dans l’étui de transport lorsque l’écrou de la borne de sortie n’est pas complètement serré et dépasse, une force externe peut être appliquée sur la borne et l’endommager, entraînant le dysfonctionnement de la production.

4.3.3 Fonction 20 mA COLLECTEUR

⚠ Attention

Utiliser une alimentation externe de 20 mA COLLECTEUR dans une plage de 5 à 28 V.
Régler la polarité de la tension appliquée comme indiqué sur la figure ci-dessous et prendre garde à ne pas appliquer de tension dans la direction contraire.

4.5.2 Utilisation d’une sonde RJ externe

⚠ Avertissement

Pour éviter tout choc électrique, s’assurer d’utiliser uniquement la sonde RJ B9108WA dédiée.

5. Mesure

⚠ Avertissement

- **Mettre l'objet à tester hors tension avant de le brancher à l'instrument. Il est très dangereux de brancher et débrancher des câbles de dérivation de mesure pendant qu'un objet est sous tension.**
- **Il est extrêmement dangereux de brancher de manière incorrecte la borne d'entrée de tension H et la borne d'entrée de courant mA. S'assurer que la sélection de la fonction de mesure (FUNCTION) et les branchements de borne sont corrects. Un branchement incorrect pourrait non seulement endommager le circuit ou le dispositif testé ainsi que l'instrument, mais pourrait également provoquer des blessures chez l'opérateur.**
- **La tension appliquée autorisée maximum pour la mise à la terre de toutes les bornes d'entrée/sortie est de 42 V crête. S'assurer de ne pas dépasser cette tension, car cela pourrait non seulement endommager l'instrument mais aussi provoquer des blessures chez l'opérateur.**

⚠ Attention

À propos du fusible
Il existe un fusible de protection de l'entrée de courant intégré pour la borne d'entrée de courant.
Le fusible saute lorsqu'un courant excessif est utilisé. Si le fusible saute, s'assurer de le remplacer avec le fusible désigné (modèle : A1566EF). Pour plus de détails sur la procédure de remplacement du fusible, consulter « 3.2.4 Fusible ».

5.4 Mesure du thermocouple (TC)
5.5 Mesure de la résistance (Ω)
5.6 Mesure du détecteur de température à résistance (RTD)

⚠ Attention

Lors de l'utilisation de l'adaptateur de borne (modèle : 99022), serrer l'écrou à la main. Ne pas utiliser d'outils ou d'objets similaires. Serrer l'écrou avec un outil ou similaire pourrait endommager la borne, et causer le dysfonctionnement de la fonction de mesure. Avant de stocker l'instrument dans son étui de transport, retirer l'adaptateur de borne (modèle : 99022).
Si l'instrument est stocké dans l'étui de transport lorsque l'adaptateur est fixé, une force externe peut être appliquée sur la borne et l'endommager, entraînant le dysfonctionnement de la mesure.

9.1 Étalonnage des fonctions sources (ajustement)

⚠ Attention

- **À propos de la configuration de décalage interne de résistance (500 Ω)**
  ***: Lors de l’étalonnage du point zéro, s’assurer que la tension entre les bornes H et L est d’environ ±20 µV (±0,02 mV). Si la valeur est dépassée, l’instrument doit être réparé (étalonnage interne).**
- **À propos du courant d’excitation de résistance**
  Lors de l’étalonnage des plages de 500 Ω et 5 kΩ, deux types d’étalonnages sont nécessaires en raison des différences de courant (courant d’excitation) arrivant d’un dispositif externe.

L 500 Ω, 1 mA L 5 kΩ, 0.1 mA	Il est possible de calibrer avec la plage de mesure de résistance d’un multimètre numérique. Pendant l’étalonnage, s’assurer que le courant de mesure de résistance correspond à la valeur de courant indiquée à gauche.
H 500 Ω, 5 mA H 5 kΩ, 0.5 mA	Appliquer le courant indiqué sur la gauche à partir d’un dispositif externe, tel qu’indiqué sur le diagramme de connexion <4> puis mesurer la chute de tension et procéder à l’étalonnage.

Contents

Introduction 1
Checking the Contents of the Package 2
Safety Precautions 4
Précautions d'emploi 8
1. Product Outline 1-1
1.1 Product Outline 1-1
2. Names and Functions of Parts. 2-1
3. Before Starting Source or Measurement 3-1
3.1 Usage Precautions 3-1
3.2 Connecting a Power Supply 3-3
3.2.1 Using Alkaline Batteries 3-3
3.2.2 Using an AC Adapter 3-4
3.2.3 Using an NiMH Battery Pack 3-5
3.2.4 Fuse 3-8
3.3 Turning the Power On and Off. 3-9
3.3.1 Turning the Power On and Off 3-9
3.3.2 Auto Power Off 3-9
3.3.3 Turning the Backlight On and Off 3-10
3.4 Operating Environment 3-11
4. Source 4-1
4.1 Connecting the Source Terminals 4-2
4.2 Source DC Voltage (DCV) Signals 4-3
4.3 Source DC Current (DCA) Signals 4-4
4.3.1 Source DC Current Signals 4-4
4.3.2 4-20 mA Function 4-5
4.3.3 20 mA SINK Function 4-6
4.4 Source Resistance (Ω) Signals 4-8
4.5 Source Thermocouple (TC) Signals 4-10
4.5.1 Source Thermocouple (TC) Signals 4-10
4.5.2 Using an External RJ Sensor 4-11
4.5.3 Using the Built-in RJ Sensor. 4-12
4.6 Source Resistance Temperature Detector
(RTD) Signals 4-13

4.7 Source Frequency and Pulse (PULSE) Signals 4-15
4.7.1 Source a Continuous Pulse Train 4-16
4.7.2 Source a Pulse Cycle 4-17
4.8 Divided Output (n/m) Function. 4-18
4.9 Sweep Output Functions 4-19
4.9.1 Step Sweep Function 4-20
4.9.2 Linear Sweep Function. 4-22
4.9.3 Program Sweep Function 4-24
4.10 Temperature Monitor Function. 4-26
5. Measurement 5-1
5.1 Connecting the Measurement Terminals 5-2
5.2 Measuring DC Voltage (DCV) 5-4
5.3 Measuring DC Current (DCA) 5-4
5.3.1 Measuring DC Current 5-4
5.3.2 Measuring 24V LOOP 5-5
5.4 Measuring Thermocouple (TC) 5-6
5.5 Measuring Resistance (Ω). 5-7
5.6 Measuring Resistance Temperature Detector (RTD). 5-8
5.7 Measuring Frequency (FREQ) and Pulse 5-9
5.7.1 Measuring Frequency (FREQ) and Pulse 5-9
5.7.2 Measuring Contact Input 5-10
6. Memory Function 6-1
6.1 Data Memory Items 6-2
6.1.1 Saving. 6-3
6.1.2 Replacing and Saving. 6-3
6.1.3 Clearing Memory 6-4
6.1.4 Displaying (Confirming) Saved Data 6-5
6.2 Setting Memory Items 6-6
6.2.1 Saving. 6-6
6.2.2 Replacing and Saving. 6-7
6.2.3 Clearing Memory 6-8
6.2.4 Loading. 6-9

7. Setting Mode 7-1
7.1 Source 7-2
7.2 Measure. 7-3
7.3 Configuration 7-4
8. Communication Function 8-1
8.1 Cable Connection and Interface Specifications. 8-1
8.2 Communication Command List 8-2
8.3 Detailed Description of Commands 8-4
8.4 Error Code List 8-14
8.5 Table of Valid Communication Commands 8-15
8.6 Status Byte Format 8-17
8.7 Output Format of Printer Mode 8-18
9. Calibration Mode 9-1
9.1 Calibration of Source Functions (Adjustment). 9-2
9.2 Calibration of Measurement Functions (Adjustment) 9-5
9.3 Verification after Calibration. 9-8
9.4 Calibration of Temperature Ranges. 9-8
10. Troubleshooting 10-1
10.1 Troubleshooting Checklist 10-1
11. Specifications 11-1
12. Sales in Each Country or Region 12-1
12.1 Disposing the Product 12-1
12.2 How to Replace and Dispose the Batteries. 12-2
12.3 Authorized Representative in the EEA 12-2
12.4 For the Pollution Control of Electronic and Electrical Products of the People's Republic of China 12-3
Appendix 1 Using a Cold Junction Compensator App.1-1
Appendix 2 Block Diagram. App.2-1
Appendix 3 Installing Ferrite Core. App.3-1

1. Product Outline

1.1 Product Outline

Generation (SOURCE)

Function	Range
DC Voltage (DCV)	100 mV, 1 V, 10 V, 30 V
DC Current (DCA)	20 mA, 20 mA SINK, 4-20 mA
Resistance (Ω)	500 Ω, 5 kΩ, 50 kΩ
Thermocouple (TC)	K, E, J, T, N, L, U, R, S, B
Resistance temperature detector (RTD)	Pt100, JPt100
Frequency and pulse (PULSE)	CPM, 100 Hz, 1000 Hz, 10 kHz, 50 kHz

Measurement (MEASURE)

Function	Range
DC Voltage (DCV)	35 V, 5 V, 500 mV
DC Current (DCA)	100 mA, 20 mA
Resistance (Ω)	50 kΩ, 5 kΩ, 500 Ω
Thermocouple (TC)	K, E, J, T, N, L, U, R, S, B
Resistance temperature detector (RTD)	Pt100, JPt100
Frequency and pulse (FREQ)	100 Hz, 1000 Hz, 10 kHz, CPM, CPH
24V LOOP (DCA)	

Other

Divided output (n/m) function
Sweep output functions
 Step sweep function
 Linear sweep function
 Program sweep function
Temperature monitor function

Averaging (measurement)

2. Names and Functions of Parts

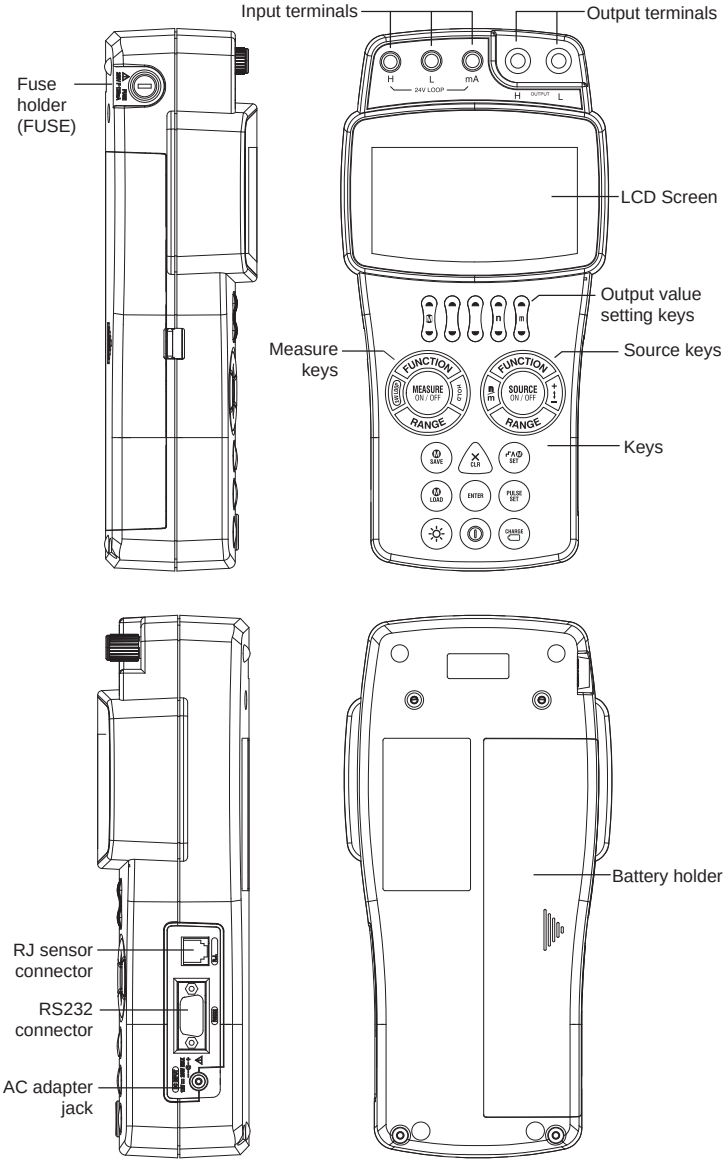

Common Keys

POWER	Turns on/off the power.
LIGHT	Turns on/off the backlight of the LCD screen. (It turns off automatically if approximately 10 minutes elapse without a key being pressed.)
SAVE	Saves measurement values and setting values.
LOAD	Displays measurement values and loads setting values.
ENTER	Confirms the selected item or displays the temperature monitor.
CHARGE	Starts/stops charging of the NiMH battery.

Output Value Setting Keys

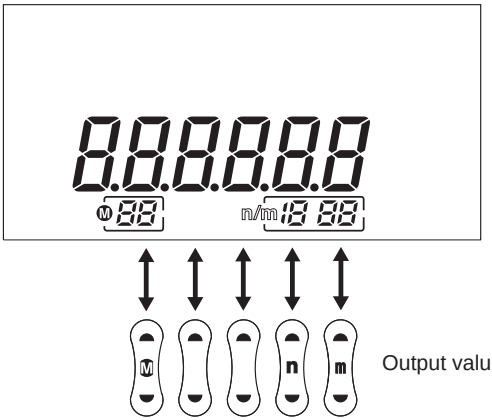

Output value setting keys

Sets the source output value.
Each ▲ (up) and ▼ (down) key corresponds to a digit, and increments or decrements the value by one count.
(The ▲ and ▼ marks are used indicate these keys in this manual.)
If you attempt to increment or decrement the value 9 or 0,
the digit moves up or down one place.

M key:	Sets the memory number for the memory function.
n key:	Sets the n (numerator side) for divided output (n/m).
m key:	Sets the m (denominator side) for divided output (n/m).

SOURCE Keys

FUNCTION	Changes the source function. DCV → DCA → Ω → TC → RTD → PULSE → (DCV) (The ◗ mark is lit for the selected function.)
RANGE	Changes the range for each function.
SOURCE ON/OFF	Turns on/off the source (setting value output).
n/m	Selects/cancels divided output (n/m) mode.
+ ←→ -	Toggles the polarity of output.

SWEEP SET	Selects step sweep, linear sweep, or program sweep.

PULSE SET	Selects the mode for generating a pulse and frequency signals. Refer to "4.7 Generating Frequency and Pulse (PULSE) Signals."

CLEAR	• Restores the setting value to its default. • Goes back one level in setting mode. • Clears the memory for the memory function.

MEASURE Keys

FUNCTION	Changes the source function. DCV → DCA → Ω → TC → RTD → FREQ → (DCV) (The ◖ mark is lit for the selected function.)
RANGE	Changes the range for each function.
MEASURE ON/OFF	OFF turns off the measurement value indication and ON turns on the measurement value indication.
24V LOOP	Selects/cancels the loop test (24 V output).
HOLD	• Holds the display value (measurement value). • Starts/Stops CPM and CPH measurement. • Starts communication data output. (When communication of the setting mode is set to printer mode.)

LCD Screen

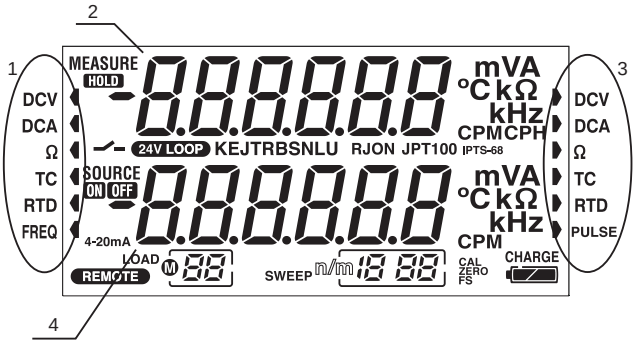

1 Indicates the function selected with the FUNCTION key of MEASURE.
2 Indicates the measurement value (top row: seven segments).
MEASURE and the unit are also displayed.
3 Indicates the function selected with the FUNCTION key of SOURCE.
4 Indicates the source setting value (bottom row: seven segments).
SOURCE and the unit are also displayed.

ON OFF	SOURCE: OFF lights when output is off or the protection circuit has been activated. ON lights when output is on.
HOLD	Indicates hold.
4-20mA	Indicates that the 4-20 mA range is selected for the source.
REMOTE	Flashes while communication data is being output. (When communication of the setting mode is set to printer mode.)
24V LOOP	Indicates that 24 V DC is being output for a loop test.
LOAD	Indicates reading of the memory function.
M 88	Lights when the memory function or program sweep function is in use. (Indicates the memory number.)
SWEEP	Lights when the sweep function is in use.
n/m 18 88	Lights when the divided output (n/m) function or step sweep function is in use.
	Indicates that contact input is selected during pulse measurement.
CAL ZERO FS	Lights or flashes during offset or full scale adjustment in calibration mode.
	Indicates the battery level of the alkaline batteries or NiMH battery.
CHARGE	Indicates that the NiMH battery pack is charging.
KEJTRBSNLU	Indicates the type of thermocouple.
RJON	Lights during an RJ compensation calculation.
JPT100	Lights when the PT100 or JPT100 standard is selected for the RTD function.
IPTS-68	Lights when IPTS-68 (temperature scale standard) is selected for temperature source and measurement (TC, RTD).

Digital Display of Alphanumeric Characters

Since the LCD screen of the instrument has seven segments, alphanumeric characters are displayed as shown below.
(Some of the characters are not used.)

0	0	A	A	I	I	R	r
1	1	B	b	i	i	S	S
2	2	C	C	J	J	T	t
3	3	c	c	K	K	U	U
4	4	D	d	L	L	u	u
5	5	E	E	M	n	V	V
6	6	F	F	N	n	W	u
7	7	G	G	O	o	X	H
8	8	H	H	P	P	Y	y
9	9	h	h	Q	q	Z	z

3. Before Starting Source or Measurement

3.1 Usage Precautions

Safety Precautions

- Before using the instrument, be sure to thoroughly read "Safety Precautions" on pages 4 and 5.
- Do not remove the casing from the instrument.
  Some parts inside the instrument are extremely dangerous because they use a high voltage. When the instrument needs an internal inspection or calibration, contact YOKOGAWA or the dealer from whom you purchased the instrument.
- In the case of an abnormality
  If the instrument begins to emit smoke, give off an unusual odor, or show any other signs of an abnormality, immediately turn off the power switch. If you are using an AC adapter, unplug the power cord from the outlet. Also turn off any object under test that is connected to the input terminals.

General Handling Precautions

- When carrying the instrument
  Turn off the power to the object under test. Turn off the power to the instrument and unplug the power cord from the outlet if you are using an AC adapter. Then, disconnect all lead cables from the instrument.
  When carrying the instrument, use the carrying case.
- Keep input terminals away from electrically charged articles as they may damage the internal circuitry.
- Do not allow volatile chemicals to come into contact with the casing or operation panel. Also, do not allow the instrument to come into contact with any rubber or vinyl products for prolonged periods.
  Since the operation panel is made of thermoplastic resin, be careful not to let it come into contact with any heat sources such as a soldering iron.
- Before cleaning the case and operation panel, make sure that the power cord is unplugged from the outlet if you are using an AC adapter.
  Dampen a clean soft cloth with water and gently wipe the surface of the casing and panel. Water getting inside the instrument may result in a failure.
- If the AC adapter will not be used for a prolonged period, unplug the power cord from the outlet.
- For precautions on handling dry batteries, refer to "3.2.1 Using Alkaline Batteries."
- Do not use the instrument with the cover for the battery holder left open.

Operating Environment

Use the instrument in locations that meet the following conditions:
- Ambient temperature and humidity
  Ambient temperature: 0 to 40°C
  Ambient humidity: 20 to 80% RH (no condensation)
- Indoors

Do not use the instrument in the following locations:
- Outdoors
- In direct sunlight or near heat sources
- Where the instrument is exposed to water or other liquids
- Where there is a lot of mechanical vibration
- Near noise sources such as high-voltage equipment or power lines
- Near strong magnetic field sources
- Where an excessive amount of greasy fumes, steam, dust, or corrosive gases are present
- In an unstable place
- Where, for example, fire and explosions caused by inflammable gases and the like are possible

NOTE

- **When you require high source and measurement accuracy, use the instrument under the following conditions:**
  Ambient temperature: 23 ±5°C
  Ambient humidity: 20 to 80% RH (no condensation)
  When using the instrument in an ambient temperature range of 0 to 18°C or 28 to 40°C, add the temperature coefficient specified in "11. Specifications" to the accuracy.
- **When using the instrument in ambient humidity of 30% or less, use an anti-static mat to prevent static electricity.**
- **Condensation may occur if the instrument is moved from a location of low temperature and humidity to a location of high temperature and humidity, or if the temperature otherwise changes suddenly. In such a case, leave the instrument for at least one hour to ensure it is free from condensation before starting operation.**

3.2 Connecting a Power Supply

In addition to AA-size alkaline batteries (six), the instrument can use two other types of power supply.

- AA-size (LR6) alkaline batteries (six): 1.5 V
- AC adapter (optional)
- NiMH (nickel hydrogen) battery (optional): Model: 94015

3.2.1 Using Alkaline Batteries

Installing and Replacing Batteries

1. Make sure that the power switch of the instrument is turned off and the lead cables and AC adapter are not connected.
2. Slide up the lock switch on the left side of the instrument and remove the alkaline battery holder.
3. Insert the six alkaline batteries into the holder.
4. Insert the holder into the opening on the instrument.
5. Slide down the lock switch to fix the holder in place. (The lock switch indication changes to " △ FREE.")

⚠ CAUTION

Insert the batteries with their positive and negative electrodes positioned correctly as indicated on the holder.

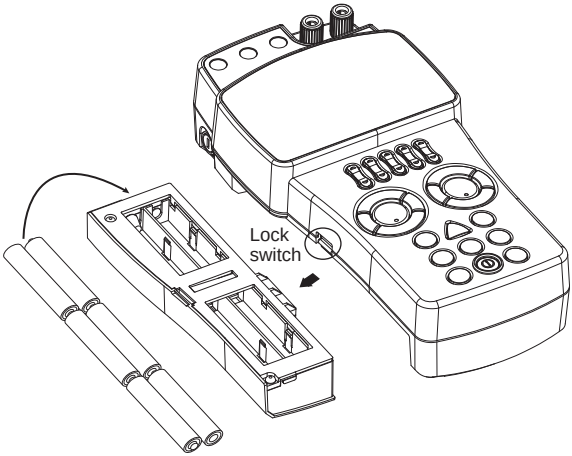

Battery Level Indication (Remaining Battery Power Indicator)

Indicates that the battery voltage is normal.

Indicates that the battery level is above 50%. (Lit)

Replace the batteries when this mark begins flashing.

3.2.2 Using an AC Adapter

⚠ WARNING

- **To prevent the possibility electrical shock or fire, be sure to use the AC adapter and the power cord supplied by YOKOGAWA.**
  Additionally, do not use the AC adapter and the power code supplied with this instrument with another instrument.
- **Make sure that the power supply voltage matches the rated supply voltage before connecting the power cord.**

Overvoltage category when using the AC adapter: Overvoltage Category II

Ratings

AC adapter power supply ratings	(Model: 94010)
Rated supply voltage	100 to 240 V AC
Allowable supply voltage range	90 to 264 V AC
Rated supply frequency	50/60 Hz
Allowable supply voltage frequency range	47 to 63 Hz
Maximum input current	1.4 A
Output voltage rating of AC adapter	12.0 V DC
Maximum output current rating of AC adapter	3.0 A

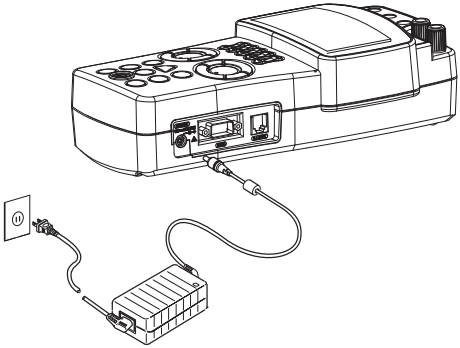

1 Make sure that the power switch of the instrument is turned off.
2 Connect the AC adapter to the AC adapter jack of the instrument.
3 Connect the plug of the power cord to the power connector of the AC adapter.
4 Connect the other plug of the power cord to an outlet that meets the ratings described above.

3.2.3 Using an NiMH Battery Pack

Charging type NiMH (nickel hydrogen) battery (optional): Model: 94015
Specifications Voltage: 7.2 V
Capacity: 2100 mAh (typ.), 1900 mAh (min.)
Number of times can be charged (life cycle): Approx. 300 times (varies depending on the operating environment)

Be sure to observe the following warnings on handling the NiMH battery.

⚠ WARNING

- **The electrolyte solution contained in the NiMH battery pack is alkaline. If it comes into contact with any clothing or skin due to a leakage from or rupture in the battery pack, the clothing or skin may be damaged. In particular, if the solution gets into an eye, it may cause loss of eyesight. In such a case, do not rub the affected eye, but thoroughly wash it immediately with clean water. Then see a doctor quickly for treatment.**
- **When replacing the NiMH battery pack, always turn off the power switch of the instrument and disconnect the AC adapter power cord from the outlet to avoid possible danger such as a short in the electric circuit or electrical shock.**
- **Do not use any battery pack other than YOKOGAWA's NiMH battery pack (model: 94015).**
- **Do not leave the NiMH battery pack in strong direct sunlight, inside a vehicle under the hot sun, or near a fire, otherwise it may result in a solution leakage or deterioration in the performance and/or life.**
- **Do not disassemble or modify the NiMH battery pack, otherwise the protective features of the battery pack may be damaged, resulting in heating up or rupture.**
- **Do not short the NiMH battery as this may cause burns due to the battery pack heating up.**
- **Do not dispose of the battery pack in a fire or apply heat to it, otherwise there is a risk that it will rupture or its electrolyte solution will scatter.**
- **Do not apply excessive shock to the battery pack, for example, by throwing it. Doing so may cause solution leakage, battery pack heating, or rupture.**
- **Do not use a defective battery pack, such as one leaking solution, deformed, discolored, or showing any other abnormality.**
- **Avoid any metal coming into contact with the battery pack when carrying it, as there is a danger of a short.**
- **Do not immerse the battery pack in water or make it wet. Otherwise, it may heat up or rust, as well as lead to a loss of functions.**

If the battery pack will not be used for a prolonged period, remove it from the instrument and store it in the following environment.

Storage period of 1 year or less:
Temperature of -20 to 35°C (in locations with low humidity)
Storage period of 3 months or less:
Temperature of -20 to 45°C (in locationswith low humidity)

Installing the NiMH Battery

1 Make sure that the power switch of the instrument is turned off and the lead cables and AC adapter are not connected.
2 If alkaline batteries are in use, slide up the lock switch on the left side of the instrument and remove the alkaline battery holder before installing the NiMH battery.
3 Insert the holder into the opening on the instrument. Slide the holder into the opening so that the connector is aligned properly.
4 Slide down the lock switch to fix the holder in place. (The lock switch indication changes to " △ FREE.")

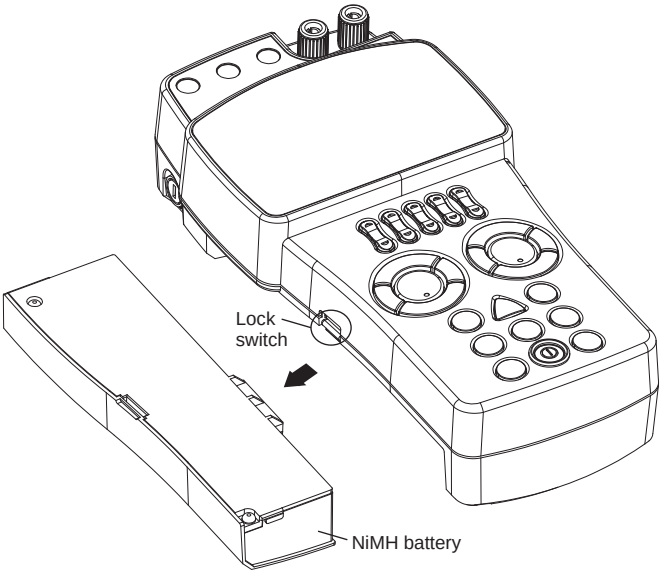

Battery Level Indication (Remaining Battery Power Indicator)

Indicates that the battery voltage is normal.

Indicates that the battery level is above 50%. (Lit)

Charge the battery when this mark begins flashing.

The battery takes approximately 6 hours to fully charge from the flashing state.

- **Charging the NiMH Battery**

For safety reasons, the NiMH battery is not sufficiently charged at the time of shipment. Fully charge the NiMH battery prior to use. Use the instrument and AC adapter for charging.

⚠ WARNING

Be sure to use the CA150 to charge the NiMH battery. Charge the NiMH battery in an environment with a temperature within the range of 10 to 35°C. Charging the battery at a temperature that is not in the range above may result in an insufficient charge, solution leakage, or heating up.

- **Charging Procedure**

1. Connect the AC adapter to the instrument when the NiMH battery pack is installed in accordance with the installation procedure.
2. Press the POWER key to turn on the power.
   Press the CHARGE key to start charging.
   (The CHARGE mark appears.)
3. The CHARGE mark disappears when charging is complete.
   (To stop charging, press the CHARGE key again.)

⚠ CAUTION

- **Performing generation or measurement is possible during charging, but accuracy is affected by the heat generated by charging.**
  To ensure accurate measurement (generation), use of the charging function at the same time is not recommended.
- **For details on the effect of heat generation on accuracy (adding of temperature coefficient), refer to the specifications.**
- **Performing generation and measurement after charging is complete (after at least 2 hours have elapsed) is recommended.**

- **Usage Guidelines**

Usage time differs depending on the source function.

Source output (Measurement: ON, 24V LOOP: OFF)	5 V DC/10 kΩ or more	Approx. 10 hours

Tip

Charging NiMH Battery
Depending on the use condition of the main body of the instrument, charging may aborted.
E.g.) When outputting 24 V DC (loop), press the CHARGE key again if the load current is high. If charging is aborted again, turn the OUTPUT OFF and try charging again.

- **NiMH Battery Life**

The battery can be charged approximately 300 times.
(This number varies depending on the operating environment.)
The life of the battery is over when the low battery level indication appears only a short time after the battery is fully charged. In such a case, replace the NiMH battery pack with a new one.

For details on disposing, refer to "10.2.2 How to Replace and Dispose the Batteries."

3.2.4 Fuse

⚠ CAUTION

Be sure to use the designated fuse.

A fuse for current input protection is inserted in the side (fuse holder) of the instrument.
Part number: A1566EF, Rating: 125 mA/250 V FAST

Procedure for Replacing the Fuse
When replacing the fuse, turn the M- part of the fuse holder with a flat-blade screwdriver and remove the holder. Then, replace the fuse, reinsert the fuse holder, and turn the fuse holder with the screwdriver.

Fuse holder

Fuse
(A1566EF)

3.3 Turning the Power On and Off

3.3.1 Turning the Power On and Off

When the power is off, press the POWER key to turn the power on.
Press the POWER key again to turn the power off.
Pressing the POWER key after the power is turned off does not turn the power on for approximately two seconds.

CAUTION

When the power is on, check that the instrument operates normally.

NOTE

Turn the power off before disconnecting the AC adapter from the power supply. Remove the plug of the AC adapter from the instrument when running the instrument on batteries.

3.3.2 Auto Power Off

When running the instrument on batteries, the LCD screen flashes (alarm) if approximately 9 minutes 30 seconds elapse without a key being pressed. If no operation is performed within approximately 30 seconds after that, the power turns off automatically.
(The auto power off function is set to ON at the time of shipment.)
To continue using the instrument after the screen begins flashing, press any key other than the POWER key so that the screen stops flashing and lights.

Tip

If the AC adapter is in use or the CPH range is selected for pulse measurement, the instrument is not turned off automatically regardless of the auto power off setting.

For details on canceling the auto power off function, refer to "7. Setting Mode."

3.3.3 Turning the Backlight On and Off

The backlight of the LCD screen can be turned on.
This makes it easy to see the screen when working in dark places.

Press the LIGHT key to turn the backlight on.
Press the LIGHT key again to turn the backlight off.

NOTE

The backlight turns off automatically if approximately 10 minutes elapse without a key being pressed. To continue using the backlight, press any key other than the POWER key.
Using the backlight when the instrument is running on batteries reduces the lifespan of the batteries.

3.4 Operating Environment

Operating Environment

Use the CA150 in the following environment:
Ambient temperature: 0 to 40°C
Ambient humidity: 20 to 80 % RH (no condensation)
Operating altitude: 2000 m or less
Indoors

Measurement Category

The CA150 is designed for measurement category O (Other).

⚠ WARNING

Do not use the CA150 for measurements in locations that fall under measurement categories II, III, and IV.

Measurement Category

Measurement Category	Description	Remarks
O (None, Other)	Other circuits that are not directly connect to MAINS.	Circuits not connected to a mains power source.
CAT II	For measurement performed on circuits directly connected to the low-voltage installation.	Appliances, portable equipment, etc.
CAT III	For measurement performed in the building installation.	Distribution board, circuit breaker, etc.
CAT IV	For measurement performed at the source of the low-voltage installation.	Overhead wire, cable systems, etc.

Pollution Degree

The pollution degree of the CA150 in the operating environment is 2. Pollution Degree applies to the degree of adhesion of a solid, liquid, or gas which deteriorates withstand voltage or surface resistivity. Pollution Degree 2 applies to normal indoor atmospheres. Normally, only non-conductive pollution is emitted.
However, a temporary electrical conduction may occur depending on the concentration.

NOTE

- **For accurate source and measurement, operate the CA150 in the 23 ± 5°C temperature range and 55 ± 10% RH.**
- **Condensation may occur if the CA150 is moved to another place where the ambient temperature and humidity are higher, or if the temperature changes rapidly. If this happens, let the CA150 adjust to the new environment for at least two hours before using it.**

Storage location

- We recommend you store the CA150 in an environment with a temperature between 0 and 50°C and a relative humidity between 5 to 85% RH.

- When storing the CA150, avoid a location that is:
  - Outdoors,
  - exposed to direct sunlight,
  - exposed to water or other liquids,
  - 60°C or higher,
  - 90% RH or higher,
  - close to a heat source,
  - exposed to severe vibrations,
  - exposed to corrosive or explosive gas, or
  - exposed to excessive amount of soot, dust, salt, and iron.

4. Source

The instrument can source DC voltage, DC current (current sink), resistance, thermocouple, resistance temperature detector, and frequency/pulse signals.

⚠ WARNING

To protect against the risk of electrical shock, do not apply a voltage of 30 V or more to the output terminals.
Also ensure that the circuit-to-ground voltage does not exceed 30V.
Be sure to use the supplied lead cables.

⚠ CAUTION

Do not apply any voltage to the output terminals for ranges other than 20 mA SINK. Otherwise the internal circuitry may be damaged.
The voltage drop component due to the resistance (approximately 0.1 Ω on a round-trip basis) of the lead cables becomes an error on the instrument.

Precaution of connecting the output terminals

⚠ CAUTION

Tighten the output terminal knob by hand.
Do not use a tool or the like. Tightening the knob using a tool or the like may damage the terminal, resulting in the disability of normal generation.
Before storing the instrument in the carrying case, tighten the output terminal knob.
If the instrument is stored in the carrying case while the output terminal knob is not tightened completely and is protruding, an external force may be applied to the terminal, thus causing damage to the terminal and resulting in the disability of generation.

4.1 Connecting the Source Terminals

Connect the supplied source lead cables (model: 98020) to the output terminals of the instrument. Connect the clips to the input terminals of the target device.
Be sure to confirm the polarity to ensure the clips are correctly connected to the input terminals.

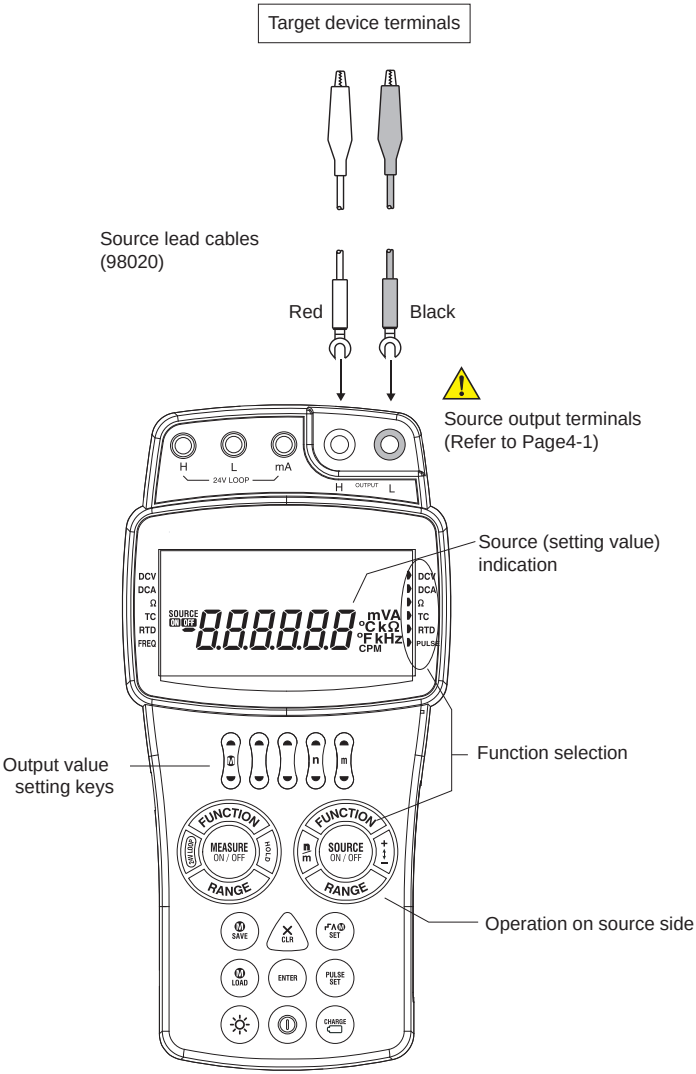

4.2 Source DC Voltage (DCV) Signals

1 Connect the terminals.
2 Use the FUNCTION key on the SOURCE side to align the ▶ source mark with DCV. (DC voltage selection)
3 Use the RANGE key to select a range. (100 mV, 1 V, 10 V, or 30 V)
4 Use the ▲ ▼ output value setting keys to set each digit output value.
Each ▲ ▼ key corresponds to a digit of the setting value.
Each time a key is pressed the value is incremented or decremented by one count. If you attempt to increment or decrement the value 9 or 0, the digit moves up or down one place.
A value continues to change when you hold down the key.
Press the CLEAR key to restore the setting to its initial value (zero).
5 Use the + ← → - key to select a polarity if the polarity needs to be changed. (No sign appears for +.)
6 Press the SOURCE ON/OFF key to start generation. (SOURCE OFF changes to ON.)
7 Press the SOURCE ON/OFF key again to turn off the output. (OFF lights and the output terminals are open-circuited.)

- When using the divided output (n/m) function, refer to "4.8 Divided Output (n/m) Function."
- When using a sweep output function, refer to "4.9 Sweep Output Functions."
- When using the temperature monitor function, refer to "4.10 Temperature Monitor Function."

Tip

In the following cases, the protection circuit is activated and the output is turned off.
- If settings are modified with the FUNCTION and RANGE keys.
- If output terminals (or lead cables connected to the terminals) are short-circuited.
- The current becomes excessive (an overload current).

4.3 Source DC Current (DCA) Signals

4.3.1 Source DC Current Signals

1 Connect the terminals.
2 Use the FUNCTION key on the SOURCE side to align the ◗ source mark with DCA. (DC current selection)
3 Use the RANGE key to select the 20 mA range. (Max. 22.000 mA)
4 Use the ▲ ▼ output value setting keys to set each digit output value.
Each ▲ ▼ key corresponds to a digit of the setting value.
Each time a key is pressed the value is incremented or decremented by one count. If you attempt to increment or decrement the value 9 or 0, the digit moves up or down one place.
A value continues to change when you hold down the key.
Press the CLEAR key to restore the setting to its initial value (zero).
5 Use the + ← → - key to select a polarity if the polarity needs to be changed. (No sign appears for +.)
For the - polarity, refer to "4.3.3 20 mA SINK Function."
6 Press the SOURCE ON/OFF key to start generation.
(SOURCE OFF changes to ON.)
7 Press the SOURCE ON/OFF key again to turn off the output.
(OFF lights and the output terminals are open-circuited.)

- When using the divided output (n/m) function, refer to "4.8 Divided Output (n/m) Function."
- When using a sweep output function, refer to "4.9 Sweep Output Functions."
- When using the temperature monitor function, refer to "4.10 Temperature Monitor Function."

Tip

In the following cases, the protection circuit is activated and the output is turned off.
- If settings are modified with the FUNCTION and RANGE keys.
- If output terminals (or lead cables connected to the terminals) are open-circuited.
- The voltage becomes excessive.

4.3.2 4-20 mA Function

The source current can be increased or decreased in 4 mA steps.

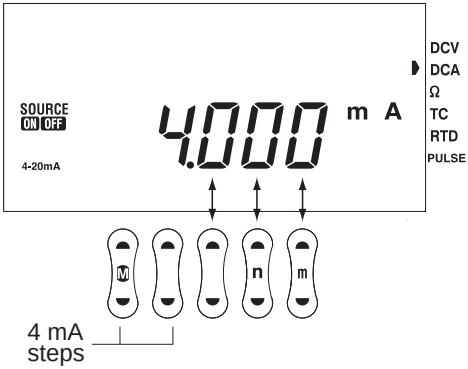

1 Connect the terminals.
2 Use the FUNCTION key on the SOURCE side to align the ▶ source mark with DCA. (DC current selection)
3 Use the RANGE key to select the 4-20 mA range. (4-20 mA lights.)
4 Set the output value.
Use the ▲ ▼ output value setting keys for the two leftmost digits to set the value in 4 mA steps up and down. (4-8-12-16-20 mA)
Use the ▲ ▼ output value setting keys for the three rightmost digits to increment or decrement the value by one count.
(Use these keys to make fine adjustments, etc.)
Press the CLEAR key to restore the setting to its initial value (4.000).
5 Press the SOURCE ON/OFF key to start generation.
(SOURCE OFF changes to ON.)
6 Press the SOURCE ON/OFF key again to turn off the output.
(OFF lights and the output terminals are open-circuited.)

Tip

A step-down operation in which the setting value becomes 3 mA or less is not possible.

- When you use the linear sweep function,
  the generation start (0%) is set to 4 mA. Refer to "4.9.2 Linear Function."
- The same is the case when you use the divided output (n/m) function.
  Refer to "4-8 Divided Output (n/m) Function."

4.3.3 20 mA SINK Function

The SINK function allows you to use DC current (DCA) with the polarity set to - (minus). This allows drawing (SINK) the specified value of the current from an external voltage source (distributor, etc.) in the direction of the H terminal. Thus, you can use the instrument in a loop test, for example, as a simulator for two-wire transmitters.

⚠ CAUTION

Use the external power supply of 20 mA SINK within the 5 to 28 V range.

Set the polarity of the applied voltage as shown in the figure below and take care not apply a voltage in the opposite direction.

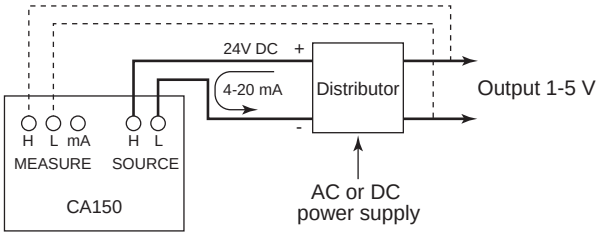

1 Use the FUNCTION key on the SOURCE side to align the ▶ source mark with DCA. (DC current selection)
2 Use the RANGE key to select the 20 mA range. (-22.000 mA to 22.000 mA)
3 Use the ▲ ▼ output value setting keys to set each digit output value. Each ▲ ▼ key corresponds to a digit of the setting value. Each time a key is pressed the value is incremented or decremented by one count. If you attempt to increment or decrement the value 9 or 0, the digit moves up or down one place. A value continues to change when you hold down the key. Press the CLEAR key to restore the setting to its initial value (zero).
4 Use the + ← → - key to set the polarity to minus.
5 Connect the terminals as shown in the figure above.
6 Turn on the power of the external voltage source (distributor). Press the SOURCE ON/OFF key to start generation. (SOURCE OFF changes to ON.)
7 Press the SOURCE ON/OFF key again to turn off the output. (OFF lights and the output terminals are open-circuited.)

Tip

The I/O signals of the distributor can be checked by connecting the terminals as indicated by the dashed line in the figure above.

Input Inductance Component

- The current source function of the instrument may result in an unstable output if the instrument is connected to, for example, a positioner or electro-pneumatic converter having a large input inductance component. Make sure the input inductance component of the equipment to be connected is no greater than 100 µH.
- If the equipment's input inductance component is unknown, connect the instrument to the equipment as shown in the figure below, and measure the generated current at the MEASURE side.
  If the reading does not stabilize or an accuracy error results at that point, the input inductance component is likely to be greater than 100 µH.

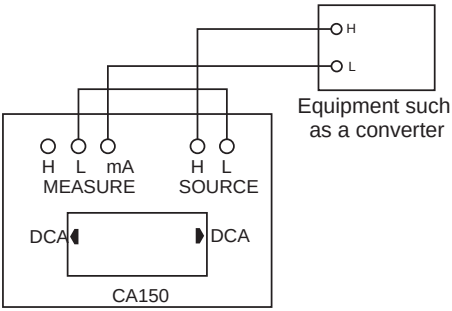

- If the equipment's input inductance component is too large, connect a 200 Ω resistor R and a 1 µF capacitor C to the instrument's outputs, as shown in the figure below.
  This setup makes it possible to connect an input having an inductance component of up to 3 H to the instrument.
  Note, however, that the instrument's response time becomes 1 second (at load resistances no greater than 2 kΩ).
  Do not use this circuitry for purposes other than current generation (DCA), otherwise errors may be produced.

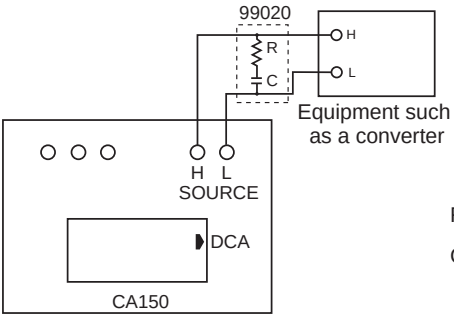

R: 200 Ω ±10%, 1/4 W

C: 1µF ±10%, 50V

This combination of a resistor (200 Ω) and capacitor (1 µF) is available as an accessory (Model: 99020).

4.4 Source Resistance (Ω) Signals

Procedure for Generating Resistance Signals

- The instrument generates a resistance signal by receiving the resistance-measuring current I supplied from the device under calibration (resistance meter, RTD thermometer, etc.) and delivering the voltage V = R × I proportional to the preset resistance R between the output terminals, and thus producing the equivalent resistance R = V/I. Consequently, the instrument generates the signal correctly only for such devices that employ this method of measurement.
- The allowable range of the resistance measuring current I that the instrument receives from a resistance measuring device under calibration is rated as 0.01 to 5 mA.
  (This varies depending on the generated resistance value. For details, refer to the specifications.)

Obtaining Accurate Measurements

- Since the generated resistance value is calibrated without including the voltage drop component of the lead cables, the resistance (approximately 0.1 Ω on a round-trip basis) of the lead cables becomes an error in the case of a load current.
- For accurate generation of resistance signals, use a three-wire connection for output. (Refer to the figure below.)
- If the capacitance between the terminals of a device under calibration is greater than 0.01 μF, the instrument may be unable to generate correct resistance values.

Three-wire Connection Output Method

Attach another black source lead cable (98020) to the output terminal L side.

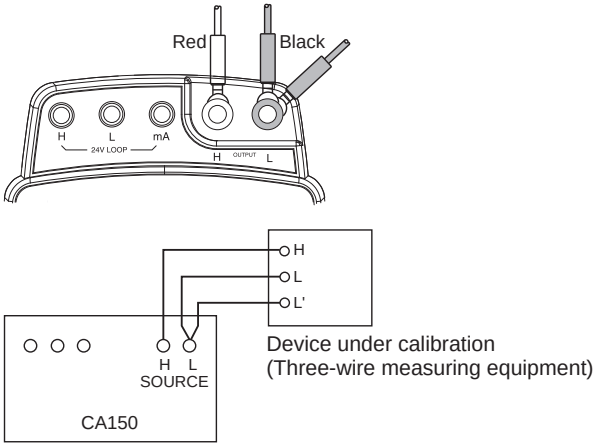

1 Connect the terminals.
2 Use the FUNCTION key on the SOURCE side to align the ▶ source mark with Ω. (Resistance selection)
3 Use the RANGE key to select a range. (500 Ω, 5 kΩ, or 50 kΩ)
4 Use the ▲ ▼ output value setting keys to set each digit output value.
Each ▲ ▼ key corresponds to a digit of the setting value.
Each time a key is pressed the value is incremented or decremented by one count. If you attempt to increment or decrement the value 9 or 0, the digit moves up or down one place.
A value continues to change when you hold down the key.
Press the CLEAR key to restore the setting to its initial value (zero).
5 Press the SOURCE ON/OFF key to start generation.
(SOURCE OFF changes to ON.)
6 Press the SOURCE ON/OFF key again to turn off the output.
(OFF lights and the output terminals are open-circuited.)

- When using the divided output (n/m) function, refer to "4.8 Divided Output (n/m) Function."
- When using a sweep output function, refer to "4.9 Sweep Output Functions."
- When using the temperature monitor function, refer to "4.10 Temperature Monitor Function."

Tip

If settings are modified with the FUNCTION and RANGE keys, the protection circuit is activated and the output is turned off.

4.5 Source Thermocouple (TC) Signals

4.5.1 Source Thermocouple (TC) Signals

Generate voltages (mV) corresponding to the following thermocouples.
Set the temperature with (°C). This enables calibration of a thermometer.
Thermocouple (TC) types: K, E, J, T, N, L, U, R, S, B
(For the temperature range, refer to the specifications.)

1. Connect the terminals.
2. Use the FUNCTION key on the SOURCE side to align the ◗ source mark with TC. (Thermocouple selection)
3. Use the RANGE key to select a thermocouple type.
4. Use the ▲ ▼ output value setting keys to set each digit output value.
5. Each ▲ ▼ key corresponds to a digit of the setting value.
   Each time a key is pressed the value is incremented or decremented by one count. If you attempt to increment or decrement the value 9 or 0, the digit moves up or down one place.
   A value continues to change when you hold down the key.
6. Press the SOURCE ON/OFF key to start generation.
7. Press the SOURCE ON/OFF key again to turn off the output.
   (OFF lights and the output terminals are open-circuited.)

Toggling Display
Press the ENTER key to toggle the display as shown below.
Setting value (°C) → source value (mV) → temperature monitor (°C)

(The display returns to the setting value (°C)
if no key is pressed for 10 seconds.)

Temperature Scale Standard Setting
The temperature scale standard (ITS-90/IPTS-68) can be selected in setting mode.
Refer to "4.6 Generating Resistance Temperature Detector (RTD) Signals" and "7. Setting Mode."

- When using the divided output (n/m) function, refer to "4.8 Divided Output (n/m) Function."
- When using a sweep output function, refer to "4.9 Sweep Output Functions."
- When using the temperature monitor function, refer to "4.10 Temperature Monitor Function."

Tip

For details on how to use a cold junction compensator, refer to “Appendix 1.”

4.5.2 Using an External RJ Sensor

Use an RJ sensor to measure (detect) the temperature of the device under calibration, and compensate the thermoelectric emf.
The instrument outputs (generates) the compensated value.
When calibrating a device with a built-in reference junction temperature compensator, connect an optional RJ sensor (model: B9108WA) to the instrument (RJ sensor connector). (RJON appears.)

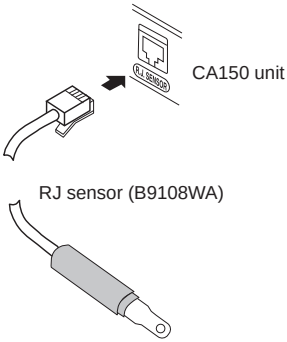

WARNING

To prevent electrical shock, be sure to use the dedicated R.J.Sensor B9108WA only.

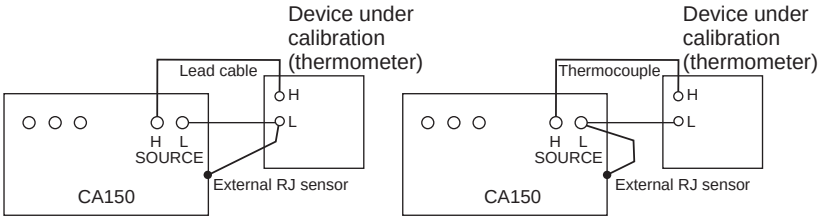

Calibration of thermometer　　Calibration including use of thermocouple

The generation operating procedure is identical to that described in "4.5.1 Generating Thermocouple (TC) Signals."

For details on using the RJ sensor built into the instrument, refer to "4.5.3 Using the Built-in RJ Sensor."

- Compensation of the output voltage using the temperature measured (detected) with the RJ sensor is executed at a sampling rate of approximately 10-second intervals. (This means that there is a delay of up to 10 seconds before the first compensation starts after the external RJ sensor is connected to the connector of the instrument.)
- To perform accurate measurement, leave enough time for the temperature to stabilize after connecting the RJ sensor to the instrument.

4.5.3 Using the Built-in RJ Sensor

Although accurate temperature output (reference junction compensation) requires an external RJ sensor to be used, you can use the RJ sensor built into the instrument.
The default setting (at shipment) is OFF.
Set the built-in RJ sensor to ON (enable) in setting mode.

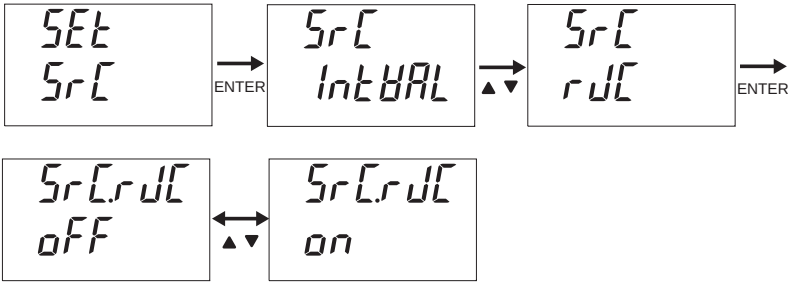

1 Simultaneously press the CLEAR and ENTER keys to switch to setting mode.
SEt appears on the top row and SrC (SOURCE) appears on the bottom row.
2 Select source.
Three types of setting modes are available.
Use the ▲ ▼ key to select a mode.
Source: SrC, Measure: MEAS, Common: ConF
3 Press the ENTER key to confirm the selection.
4 Select the RJ sensor setting.
Three types of source settings are available.
Use the ▲ ▼ key to select a setting.
Interval: IntVAL, RJ sensor: rJC, Calibration: CAL
5 Press the ENTER key to confirm the selection.
6 Use the ▲ ▼ key to select ON.
7 Simultaneously press the CLEAR and ENTER keys to switch back to normal mode.
(Press the CLEAR key to go back one level.)
8 Use the FUNCTION key on the SOURCE side to select TC.
9 Confirm that RJON appears.

The generation operating procedure is identical to that described in "4.5.1 Generating Thermocouple (TC) Signals."
For details on setting mode, refer to "7. Setting Mode."

Tip

The built-in RJ sensor measures (detects) the internal temperature of the measurement terminals. Accuracy is affected by temperature rises due to, for example, charging. For accurate temperature output, use an external RJ sensor or cold junction compensator.

4.6 Source Resistance Temperature Detector (RTD) Signals

Resistance Temperature Detector: Select from PT100 and JPT100.
Temperature scale standard: Select from ITS-90 and IPTS-68.
(The default setting: ITS-90)
The temperature scale standard can be set in setting mode.

1. Connect the terminals.
2. Use the FUNCTION key on the SOURCE side to align the ◗ source mark with RTD.
   (Resistance temperature detector selection)
3. Use the RANGE key to select PT100 or JPT100.
4. Use the ▲ ▼ output value setting keys to set each digit output value.
   Each ▲ ▼ key corresponds to a digit of the setting value.
   Each time a key is pressed the value is incremented or decremented by one count. If you attempt to increment or decrement the value 9 or 0, the digit moves up or down one place.
   A value continues to change when you hold down the key.
   Press the CLEAR key to restore the setting to its initial value (zero).
5. Use the + ← → - key to select a polarity if the polarity needs to be changed. (No sign appears for +.)
6. Press the SOURCE ON/OFF key to start generation.
   (SOURCE OFF changes to ON.)
7. Press the SOURCE ON/OFF key again to turn off the output.
   (OFF lights and the output terminals are open-circuited.)

Toggling Display

Press the ENTER key to toggle the display as shown below.
Setting value (°C) → resistance value corresponding to temperature (Ω) → temperature monitor (°C)

(The display returns to the setting value (°C) if no key is pressed for 10 seconds.)

- When using the divided output (n/m) function, refer to "4.8 Divided Output (n/m) Function."
- When using a sweep output function, refer to "4.9 Sweep Output Functions."
- When using the temperature monitor function, refer to "4.10 Temperature Monitor Function."

Tip

For details on the procedures for resistance generation and three-wire connection output method, refer to “4.4 Generating Resistance (Ω) Signals.”

Setting the Temperature Scale Standard

You can select from ITS-90 and IPTS-68 in setting mode.
(The default setting: ITS-90)
ITS-90: 1990 International Temperature Scale
IPTS-68: 1968 International Practical Temperature Scale

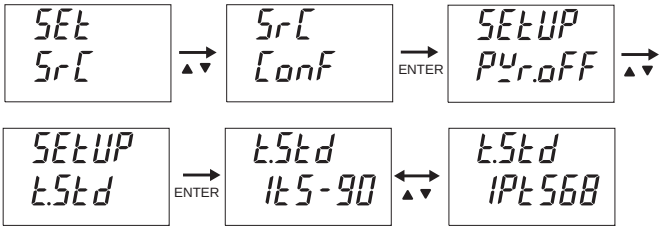

1 Simultaneously press the CLEAR and ENTER keys to switch to setting mode.
SEt appears on the top row and SrC (SOURCE) appears on the bottom row.
2 Select common.
Three types of setting modes are available.
Use the ▲ ▼ key to select a mode.
Source: SrC, Measure: MEAS, Common: ConF
3 Press the ENTER key to confirm the selection.
4 Select the temperature scale standard setting.
Four types of common settings are available.
Use the ▲ ▼ key to select a setting.
Auto power off: PWr.oFF, Communication: CoM, Date: dAtE, Temperature scale standard: t.Std
5 Press the ENTER key to confirm the selection.
6 Use the ▲ ▼ key to select ITS-90 or IPTS-68.
7 Simultaneously press the CLEAR and ENTER keys to switch back to normal mode.
(Press the CLEAR key to go back one level.)
8 Use the FUNCTION key on the SOURCE side to select RTD.
9 IPTS68 appears if IPTS-68 is set.

For details on setting mode, refer to "7. Setting Mode."

4.7 Source Frequency and Pulse (PULSE) Signals

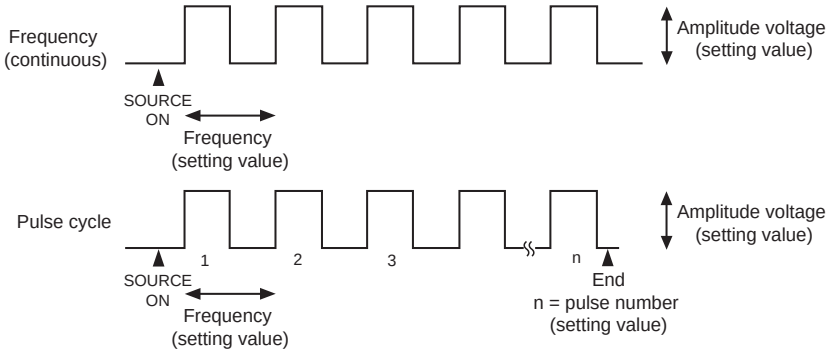

PULSE SET Key

When the generation of frequency and pulse signals is selected with FUNCTION of SOURCE, each press of the PULSE SET key toggles the mode as shown below.

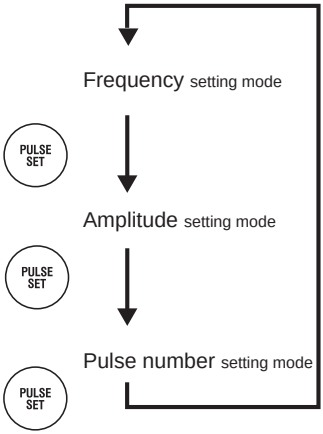

Amplitude Voltage Setting Values

Default value:	0.1000 V
Upper value:	11.0000 V
Lower value:	0.0000 V
Resolution:	0.0001 V

4.7.1 Source a Continuous Pulse Train

1 Connect the terminals.
2 Use the FUNCTION key on the SOURCE side to select frequency and pulse (PULSE). (◗ PULSE appears.)
3 Use the RANGE key to select a frequency setting mode.
(Default setting: 100 Hz)
(100 Hz, 1000 Hz, 10 kHz, 50 kHz, 1000 CPM)
Use the ▲ ▼ output value setting keys to set the frequency.
Each time a key is pressed the value is incremented or decremented by one count.
If you attempt to increment or decrement the value 9 or 0, the digit moves up or down one place.
A value continues to change when you hold down the key.
Press the CLEAR key to restore the frequency setting of each range to its default setting.
4 Press the PULSE SET key once to switch to amplitude setting mode.
Use the ▲ ▼ output value setting keys to set the voltage.
Press the CLEAR key to restore the setting to 0.10000 V.
5 Press the PULSE SET key again to switch to pulse number setting mode.
(Default setting: Cont, continuous pulse)
For generating a continuous frequency, no setting is necessary.
For generating a pulse cycle, set the pulse number.
6 Press the PULSE SET key again to return back to frequency setting mode.
7 Press the SOURCE ON/OFF key to start generation.
(SOURCE OFF changes to ON.)
8 Press the SOURCE ON/OFF key again to turn off the output.
(OFF lights and the output terminals are open-circuited.)

Tip

When frequency or pulse (PULSE) is selected using FUNCTION, the sweep functions (step, linear, and program) and the divided output (n/m) function cannot be used.

4.7.2 Source a Pulse Cycle

1 Connect the terminals.
2 Use the FUNCTION key on the SOURCE side to select frequency and pulse (PULSE). (▶ PULSE appears.)
3 Use the RANGE key to select a frequency setting mode.
(Default setting: 100 Hz)
(100 Hz, 1000 Hz, 10 kHz, 50 kHz, 1000 CPM)
Use the ▲ ▼ output value setting keys to set the frequency.
Each time a key is pressed the value is incremented or decremented by one count.
If you attempt to increment or decrement the value 9 or 0, the digit moves up or down one place. A value continues to change when you hold down the key.
Press the CLEAR key to restore the frequency setting of each range to its default setting.
4 Press the PULSE SET key once to switch to amplitude setting mode.
Use the ▲ ▼ output value setting keys to set the voltage.
Press the CLEAR key to restore the setting to 0.10000 V.
5 Press the PULSE SET key again to switch to pulse number setting mode.
(Default setting: Cont, continuous pulse)
Use the ▲ ▼ output value setting keys to set the pulse number.
Press the CLEAR key to restore the pulse setting to Cont.
6 Press the PULSE SET key again to return back to frequency setting mode.
7 Press the SOURCE ON/OFF key to start generation.
(SOURCE OFF changes to ON.)
8 Press the SOURCE ON/OFF key again to turn off the output.
(OFF lights and the output terminals are open-circuited.)

Tip

When frequency or pulse (PULSE) is selected using FUNCTION, the sweep functions (step, linear, and program) and the divided output (n/m) function cannot be used.

4.8 Divided Output (n/m) Function

The divided output (n/m) function outputs a value n/m times the setpoint of a voltage, current, resistance, thermocouple or resistance temperature detector (RTD) signal.
Output value = setting value × n/m.

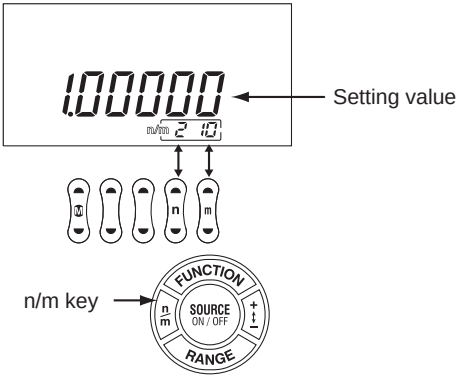

1 Set the source value to output (FUNCTION, RANGE, Setting Value).
2 Press the n/m key to switch to n/m mode. (n/m appears.)
3 Use the ▲ ▼ n key of the output setting keys to set the value for the numerator, and the ▲ ▼ m key of the output setting keys to set value for the denominator.
The initial value is 1/1. n is settable from 0 to 19 and m is settable from 1 to 19. (n≤m)
Press the CLEAR key to restore the setting to the initial value 1/1.
4 Press the SOURCE ON/OFF key to start generation.
5 Press the SOURCE ON/OFF key again to turn off the output.
(OFF lights and the output terminals are open-circuited.)
6 Press the n/m key again to cancel the n/m function.
(The n/m indication disappears.)

Tip

- When frequency or pulse (PULSE) is selected using FUNCTION, the divided output (n/m) function cannot be used.
- When the divided output (n/m) function is enabled, a displayed setting value cannot be changed. Disable the divided output (n/m) function by pressing the n/m key and switch to the normal mode.
- The n and m setting values can even be changed during output (SOURCE ON).
- Divide the range between the source setting value and the default value (4 mA):
  E.g.: When the source setting value is 3 mA and the default value is 4 mA, the output value is (3 mA - 4 mA) × 1/2 + 4 mA = 3.5 mA.
- In the case of a B type TC source, a 600°C offset is added to the source value.

4.9 Sweep Output Functions

Three types of sweep output (generation) are available.

Each press of the (SWEEP SET) key toggles the mode as shown below.

Step Sweep → Linear Sweep → Program Sweep → Cancel

Tip

When frequency or pulse (PULSE) is selected using FUNCTION, the sweep functions (step, linear, and program) cannot be used.

4.9.1 Step Sweep Function

Set divided output (n/m) to be generated automatically as shown in the figure below.

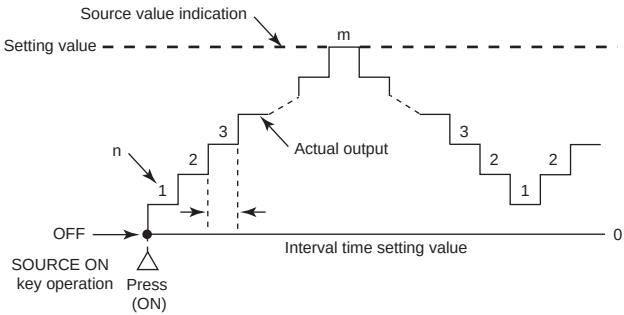

1 Set the source value to output (FUNCTION, RANGE, Setting Value).
2 Press the SWEEP SET key to select Step Sweep.
(SWEEP and n/m appear.)
3 Use the ▲ ▼ m key to set the step number.
The default value is 1. m is settable from 1 to 19.
4 Use the ▲ ▼ n key to set the generation start step.
The default value is 1. n is settable from 0 to 19.
(A value higher than the m value cannot be set.)
5 Press the SOURCE ON/OFF key to start the steps as shown in the figure above.
6 Press the SOURCE ON/OFF key again to stop the output.
7 Press the SWEEP SET key three times to cancel the sweep output function.
→ Linear Sweep → Program Sweep → Cancel

If you press the SOURCE ON/OFF key again after output is stopped in Step 6 above, output resumes from the stopped step.
If you change the n and m values while output is stopped and then press the ON/OFF key again, output restarts from the first step.

Tip

The default setting for the interval time is 5 seconds.
For details on changing the setting, refer to the next page.

Sweep Interval Time

You can change the sweep interval time.
The default setting (at shipment) is 5 seconds (FAST).
Set 5 seconds (FAST) or 10 seconds (SLOW) in setting mode.
When a sweep function is enabled, a setting mode cannot be selected.
Disable the sweep function by pressing the SWEEP SET key and switch to the normal mode.

1. In the normal mode, simultaneously press the CLEAR and ENTER keys to switch to setting mode.
   SEt appears on the top row and SrC (SOURCE) appears on the bottom row.
2. Select source.
   Three types of setting modes are available.
   Use the ▲ ▼ key to select a mode.
   Source: SrC, Measure: MEAS, Common: ConF
3. Press the ENTER key to confirm the selection.
4. Select the interval time setting.
   Three types of source settings are available.
   Use the ▲ ▼ key to select a setting.
   Interval: IntVAL, RJ sensor: rJC, Calibration: CAL
5. Press the ENTER key to confirm the selection.
6. Use the ▲ ▼ key to select SLOW or FAST.
7. Simultaneously press the CLEAR and ENTER keys to switch back to normal mode.
   (Press the CLEAR key to go back one level.)

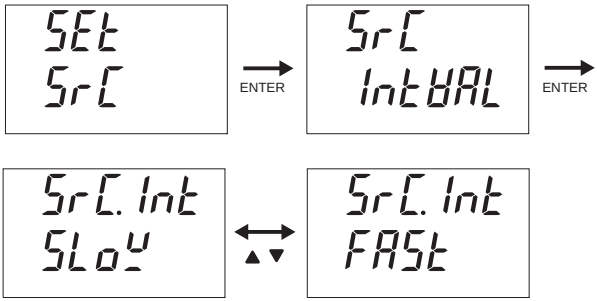

Tip

The interval setting (FAST, SLOW) of setting mode is common to the following three items. (It cannot be set individually for each item.)

Step sweep, linear sweep, and program sweep

For details on setting mode, refer to "7. Setting Mode."

4.9.2 Linear Sweep Function

Output can be varied in a continuous manner as shown in the figure below.

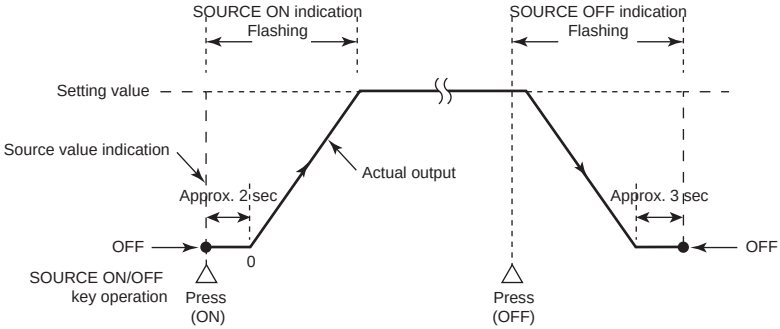

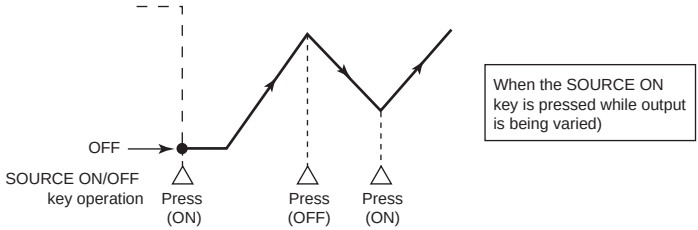

1 Set the source value to output (FUNCTION, RANGE, Setting Value).
2 Press the SWEEP SET key twice to select Linear Sweep.
Step Sweep → Linear Sweep
(SWEEP appears.)
3 Use the ▲ ▼ output setting key to set the setting value (upper value).
4 Press the SOURCE ON/OFF key to start output automatically as shown in the figure above.
5 Press the SOURCE ON/OFF key again to stop the output.
6 Press the SWEEP SET key twice to cancel the sweep output function.
→ Program Sweep → Cancel

Tip

- The default setting for the linear sweep time is 16 seconds.
  For details on changing the setting, refer to the next page.
- When output reaches the lower limit, the state is retained for 3 seconds, and then output is turned off and the first sweep operation ends.
- To change the direction for varying output, press the SOURCE ON/OFF key during the sweep operation. The direction for varying output changes and the sweep operation continues. (For example, pressing the SOURCE ON/OFF key during rising output results in the output switching to a falling direction.)

Linear Sweep Time

You can change the linear sweep time.
The default setting (at shipment) is 16 seconds (FAST).
Set 16 seconds (FAST) or 32 seconds (SLOW) in setting mode.
When a sweep function is enabled, a setting mode cannot be selected.
Disable the sweep function by pressing the SWEEP SET key and switch to the normal mode.

1. In the normal mode, simultaneously press the CLEAR and ENTER keys to switch to setting mode.
   SEt appears on the top row and SrC (SOURCE) appears on the bottom row.
2. Select source.
   Three types of setting modes are available.
   Use the ▲ ▼ key to select a mode.
   Source: SrC, Measure: MEAS, Common: ConF
3. Press the ENTER key to confirm the selection.
4. Select the sweep time (interval) setting.
   Three types of source settings are available.
   Use the ▲ ▼ key to select a setting.
   Interval: IntVAL, RJ sensor: rJC, Calibration: CAL
5. Press the ENTER key to confirm the selection.
6. Use the ▲ ▼ key to select SLOW or FAST.
7. Simultaneously press the CLEAR and ENTER keys to switch back to normal mode.
   (Press the CLEAR key to go back one level.)

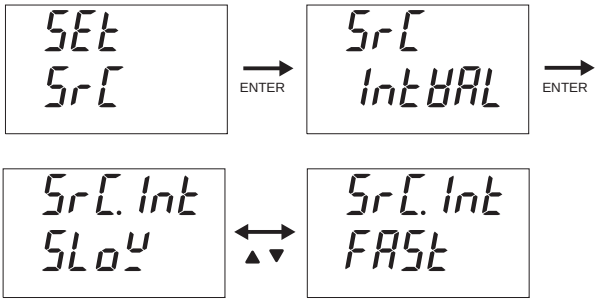

Tip

The interval setting (FAST, SLOW) of setting mode is common to the following three items. (It cannot be set individually.)

Step sweep, linear sweep, and program sweep

For details on setting mode, refer to "7. Setting Mode."

4.9.3 Program Sweep Function

Multiple setting values saved with the SAVE key can be output in order as shown in the figure below.

Memory Number	Function	Range	Source Value (Setting Value)
0	DCV	10 V	5.0000V
1	DCV	10 V	1.0000V
2	DCV	10 V	4.0000V
3	DCV	10 V	2.0000V
4	DCV	10 V	3.0000V
5	Unused	Unused	Unused
⋮	⋮	⋮	⋮
990	•	•	•

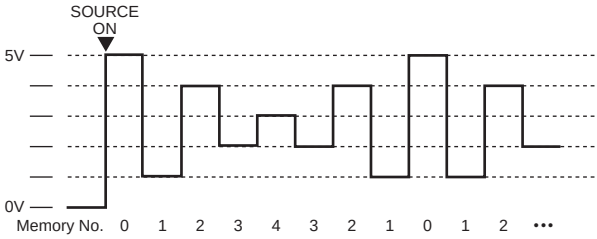

When the start number was set to 0

Tip

- This is only valid for the saved data memory information of SOURCE. (The saved information of measurement conditions is ignored.)
- If there is an unused number during the step operation or a number saved with different FUNCTION and RANGE conditions, the step operation returns to the starting number and repeats the step operation.
- The frequency or pulse source values saved in the data memory cannot be used for program sweep.

You can change the sweep interval time.
The default setting (at shipment) is 5 seconds (FAST).
Set 5 seconds (FAST) or 10 seconds (SLOW) in setting mode.
The interval setting (FAST, SLOW) is also common to step sweep and linear sweep.
When a sweep function is enabled, a setting mode cannot be selected.
Disable the sweep function by pressing the SWEEP SET key and switch to the normal mode.

Saving Source Values

1 Set the source value to output (FUNCTION, RANGE, Setting Value).
2 Press the SAVE key. (MEM No. appears.)
3 Use the ▲ ▼ Ⓜ key to select the memory number.
4 Press the ENTER key to confirm the selection.
(MEM No. disappears.)

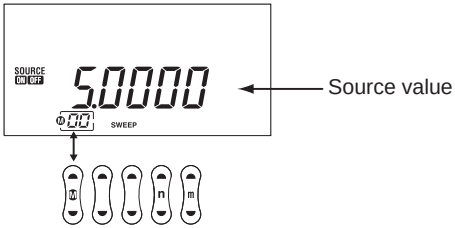

Program Sweep

1 Press the SWEEP SET key three times to select Program Sweep.
Step Sweep → Linear Sweep → Program Sweep
(SWEEP and MEM NO. appear.)
2 Use the ▲ ▼ Ⓜ key to set the memory number (Start).
(The source value that corresponds to a memory number is displayed)
3 Press the SOURCE ON/OFF key to start output automatically.
(Output moves back and forth from the start to the last memory number.)
4 Press the SOURCE ON/OFF key again to stop the output.
5 Press the SWEEP SET to cancel the sweep output function.
→ Cancel

If you press the SOURCE ON/OFF key again after output is stopped in Step 4 above, output resumes from the stopped step.
If you change the starting number while output is stopped and the press the ON/OFF key again, output restarts from the first step.

4.10 Temperature Monitor Function

The ambient temperature (temperature measured with the built-in RJ sensor) can be displayed when you are using a source function.
A reading higher than the room temperature may be displayed because of a temperature rise within the instrument.

When the Voltage (DCV), Current (DCA), Resistance (Ω), or Frequency/Pulse (PULSE) source is selected

Press the ENTER key to display the ambient temperature (°C). (°C flashes.)

When the Thermocouple (TC) or Resistance Temperature Detector (RTD) source is selected

1 The source value [setting value] (°C) is displayed.
2 Press the ENTER key once.
Thermocouple (TC): The thermoelectric power (mV) corresponding to the temperature is displayed.
Resistance Temperature Detector (RTD): The resistance value (Ω) corresponding to the temperature is displayed.
(The offset by the RJ sensor is not included.)
3 Press the ENTER key once again.
The ambient temperature (°C) is displayed.
4 Press the ENTER key once again.
The source value [setting value] (°C) is displayed.

Tip

- If an external RJ sensor is connected, the temperature measured with the external RJ sensor is displayed.
- The source value is redisplayed automatically after approximately 10 seconds in the case of thermocouple and resistance temperature detector, and approximately 2 seconds in the case of other sources.

5. Measurement

⚠ WARNING

- **Turn off the power supply to the object to be tested before connecting it to the instrument. It is extremely dangerous to connect and disconnect measurement lead cables while power is being supplied to the object.**
- **It is extremely dangerous to incorrectly connect the voltage input terminal H and the current input terminal mA. Make sure that the measurement function (FUNCTION) selection and terminal connections are correct. An incorrect connection may not only cause damage to the circuit or device under test and the instrument, but also result in injury to the operator.**
- **The maximum allowable applied voltage for the grounding of all input/output terminals is 42 Vpeak. Be sure not to exceed this voltage because doing so may not only cause damage to the instrument, but also result in injury to the operator.**

⚠ CAUTION

About the Fuse

There is a built-in current input protection fuse for the current input terminal. The fuse blows when an excessive current flows. If the fuse does blow, be sure to replace it with the designated fuse (model: A1566EF). For details on the procedure for replacing the fuse, refer to “3.2.4 Fuse.”

About Display

HOLD key: Enables you to hold the display value (measurement value).
MEASURE ON/OFF key: Switches display on and off. (Shows/hides)
Display update interval: Approximately 1 second
Overrange: "------" is displayed if the input value is overrange.

5.1 Connecting the Measurement Terminals

This shows the lead cable connections for when DCV, &ohm&, TC, RTD, or FREQ is selected with FUNCTION. For the connections when DCA or 24V LOOP (DCA) is selected, refer to the next page.

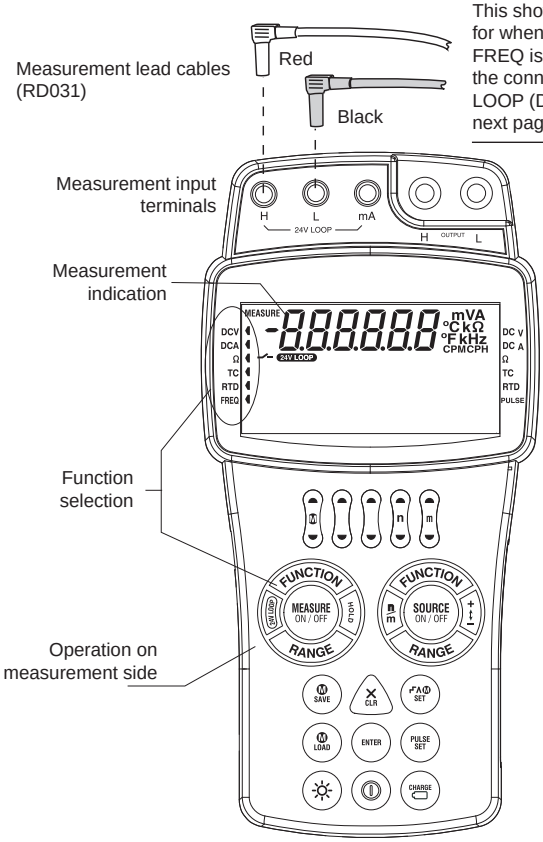

DC Current (DCA)

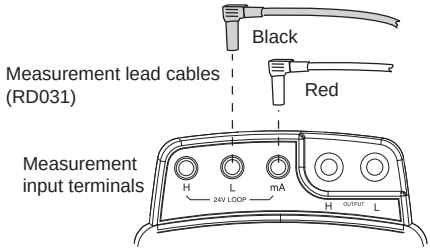

24V LOOP (DCA)

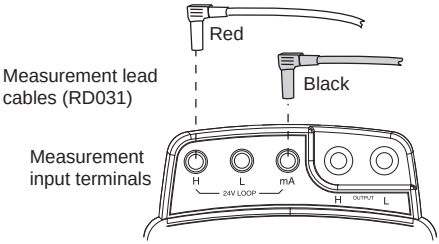

3W (Ω, RTD)

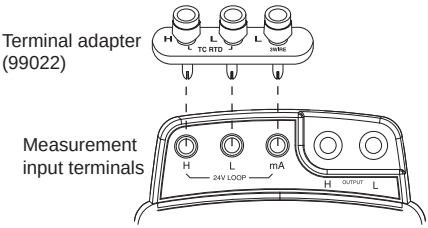

5.2 Measuring DC Voltage (DCV)

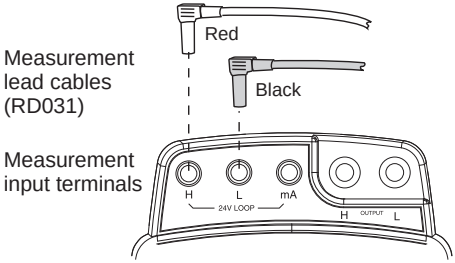

1 Connect the terminals as shown in the figure above.
2 Use the FUNCTION key on the MEASURE side to align the ◖ measurement mark with DCV. (DC voltage selection)
3 Use the RANGE key to select a range. (35 V, 5 V, or 500 mV) Set the range in accordance with the object to be measured.
4 The measurement value and unit (mV, V) appear.

5.3 Measuring DC Current (DCA)

5.3.1 Measuring DC Current

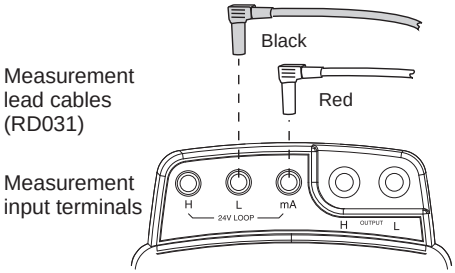

1 Connect the terminals as shown in the figure above.
2 Use the FUNCTION key on the MEASURE side to align the ▮ measurement mark with DCA. (DC current selection)
3 Use the RANGE key to select a range. (100 mA, 20 mA) Set the range in accordance with the object to be measured.
4 The measurement value and unit (mA) appear.

5.3.2 Measuring 24V LOOP

This function is for measuring the current flowing when a 24 V DC constant voltage is applied.
With 24V LOOP measurement, you can perform a transmitter loop test.

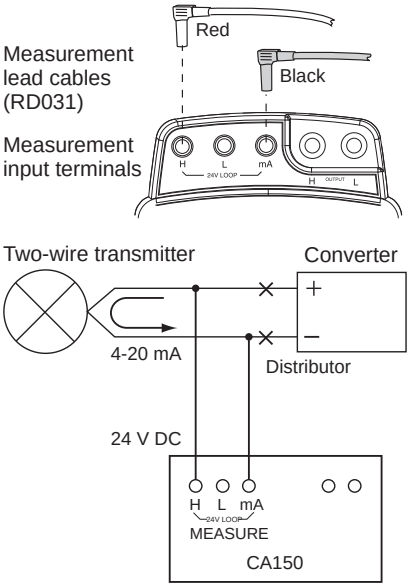

1 Connect the terminals as shown in the figure above.
2 Use the FUNCTION key on the MEASURE side to align the ◀ measurement mark with DCA. (DC current selection)
3 Press the 24V LOOP key.
A constant voltage (24 V DC) is output between the H and mA measurement terminals.
4 The measurement value and unit (mA) appear.
5 Press the 24V LOOP key again to cancel measurement.

Tip

A constant voltage (24 V DC) is not output if the measurement function is set to other than DCA.

5.4 Measuring Thermocouple (TC)

⚠ CAUTION

When using the terminal adapter (model: 99022), tighten the knob by hand. Do not use a tool or the like. Tightening the knob using a tool or the like may damage the terminal, resulting in the disability of measurement.
Before storing the instrument in the carrying case, remove the terminal adapter (model: 99022).
If the instrument is stored in the carrying case while the adapter is attached, an external force may be applied to the terminal, thus causing damage to the terminal and resulting in the disability of measurement.

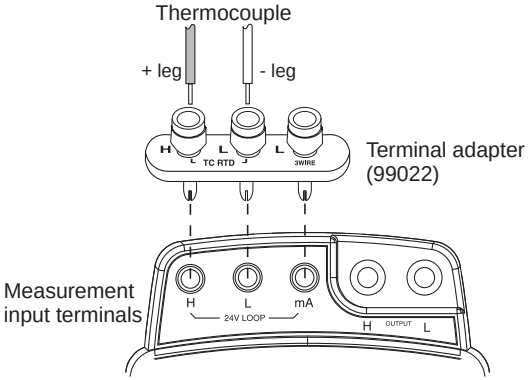

1 Connect the terminals as shown in the figure above.
2 Use the FUNCTION key on the MEASURE side to align the ◖ measurement mark with TC. (Thermocouple selection)
3 Use the RANGE key to select a thermocouple type. (K, E, J, T, N, L, U, R, S, B)
4 The measurement value and unit (°C) appear.

Tip

- When there is an overrange or measurement is not possible, “------” appears.
- If the operating environment changes suddenly, wait to stabilize before beginning measurement.
- It may take a while for the temperature of the terminal parts to stabilize after a terminal adapter is attached or a thermocouple is connected.

About Temperature Scale Standards
You can select from ITS-90 and IPTS-68 in setting mode.
(IPTS-68 appears if IPTS-68 is set.)
For details, refer to "4.6 Generating Resistance Temperature Detector (RTD) Signals" and "7. Setting Mode."

5.5 Measuring Resistance (Ω)

⚠ CAUTION

When using the terminal adapter (model: 99022), tighten the knob by hand. Do not use a tool or the like. Tightening the knob using a tool or the like may damage the terminal, resulting in the disability of measurement.
Before storing the instrument in the carrying case, remove the terminal adapter (model: 99022).
If the instrument is stored in the carrying case while the adapter is attached, an external force may be applied to the terminal, thus causing damage to the terminal and resulting in the disability of measurement.

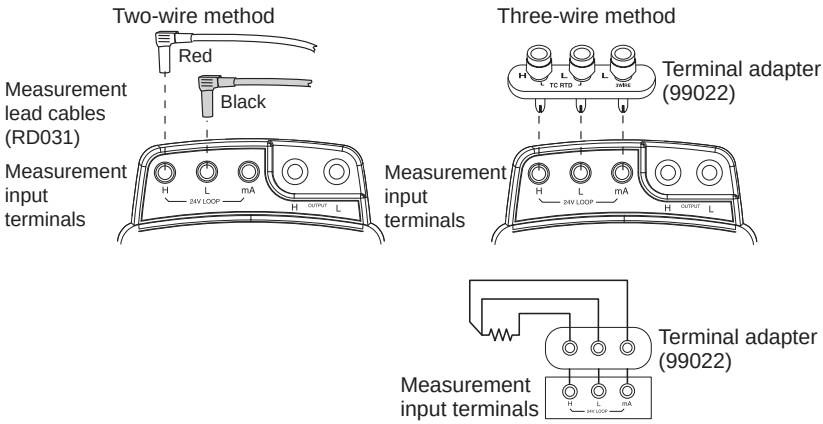

1 Connect the terminals as shown in the figure above.
2 Use the FUNCTION key on the MEASURE side to align the ◀ measurement mark with V. (Resistance selection)
3 Use the RANGE key to select a range. (50 kΩ, 5 kΩ, 500 Ω)
Set the range in accordance with the object to be measured.
4 The measurement value and unit (Ω) appear.

Tip

For accurate measurement in the 500 Ω range, use the three-wire method.

5.6 Measuring Resistance Temperature Detector (RTD)

⚠ CAUTION

When using the terminal adapter (model: 99022), tighten the knob by hand. Do not use a tool or the like. Tightening the knob using a tool or the like may damage the terminal, resulting in the disability of measurement.
Before storing the instrument in the carrying case, remove the terminal adapter (model: 99022).
If the instrument is stored in the carrying case while the adapter is attached, an external force may be applied to the terminal, thus causing damage to the terminal and resulting in the disability of measurement.

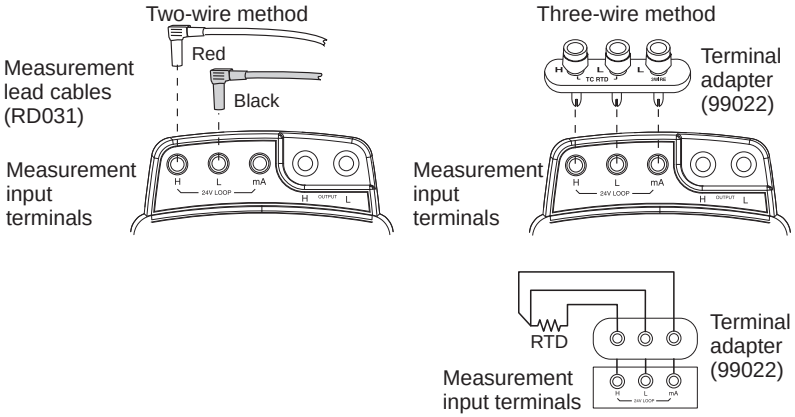

1 Connect the terminals as shown in the figure above.
2 Use the FUNCTION key on the MEASURE side to align the ◖ measurement mark with RTD.
(Resistance temperature detector selection)
3 Use the RANGE key to select a range. (PT100, JPT100)
You can select the temperature scale standard (ITS-90, IPTS-68).
4 The measurement value and unit (°C) appear.

Tip

- For accurate measurement, use the three-wire method.
- About Temperature Scale Standards
  You can select from ITS-90 and IPTS-68 in setting mode.
  (IPTS-68 appears if IPTS-68 is set.)
  For details, refer to “4.6 Generating Resistance Temperature Detector (RTD) Signals” and “7. Setting Mode.”

5.7 Measuring Frequency (FREQ) and Pulse

5.7.1 Measuring Frequency (FREQ) and Pulse

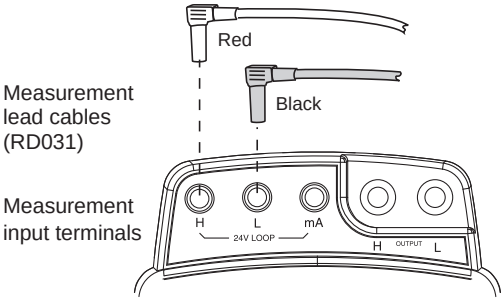

1 Connect the terminals as shown in the figure above.
2 Use the FUNCTION key on the MEASURE side to align the ◀ measurement mark with FREQ. (Frequency and pulse selection)
3 Use the RANGE key to select a range. Set the range in accordance with the object to be measured.
<For frequency measurement>
Set the range to 100 Hz, 1000 Hz, or 10 kHz.
The measurement value and unit (Hz or kHz) appear.
<For pulse measurement>
Set the range to 100000 CPM or 100000 CPH.
After the measurement value is reset to 0, the unit (CPM or CPH) and HOLD are displayed. The instrument is in a standby state for measurement.
4 Press the HOLD key to start pulse count (measurement).
In the CPM range, pulses are counted (measured) for 1 minute. In the CPH range, pulses are counted (measured) for 1 hour. (HOLD lights up.)

Tip

- In the case of the CPM and CPH ranges, pressing the HOLD key while HOLD is lit after the count ends will restart the count from 0.
- In the case of the CPM and CPH ranges, pressing the HOLD key partway through before the selected time (CPM: 1 minute, CPH: 1 hour) is reached will end the count at that point in time. (The count value until the end is displayed.)
- In the case of the CPM and CPH ranges, “------” is displayed and measurement ends if the count number exceeds the measurement range (limit).
- Auto power off does not work while the 100000 CPH range is selected.

5.7.2 Measuring Contact Input

The instrument can measure transistor contact on/off signals.
Set contact input to ON in setting mode.
The default setting (at shipment) is OFF.

1. Simultaneously press the CLEAR and ENTER keys to switch to setting mode.
   SEt appears on the top row and SrC (SOURCE) appears on the bottom row.
2. Select MEAS.
   Three types of setting modes are available.
   Use the ▲ ▼ key to select a mode.
   Source: SrC, Measure: MEAS, Common: ConF
3. Press the ENTER key to confirm the selection.
4. Select the contact input setting.
   Three types of measure settings are available.
   Use the ▲ ▼ key to select a setting.
   Averaging: AVE, Contact input: Cont, Measurement calibration: CAL
5. Press the ENTER key to confirm the selection.
6. Use the ▲ ▼ key to select ON.
7. Simultaneously press the CLEAR and ENTER keys to switch back to normal mode.
   (Press the CLEAR key to go back one level.)
8. Use the FUNCTION key on the MEASURE side to align the ◖ measurement mark with FREQ. (Frequency and pulse selection).
   The ⌁ mark appears.
9. The measurement value and unit (Hz, kHz, CPM, CPH) appear.

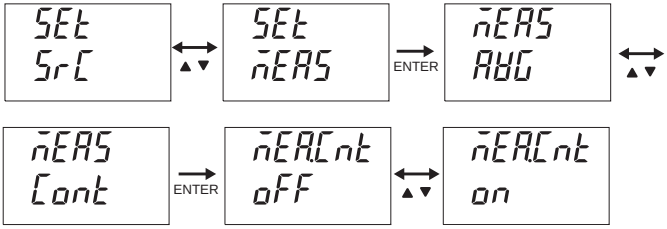

For details on setting mode, refer to "7. Setting Mode."

6. Memory Function

Two types of information are saved to memory: data memory items and setting memory items. (Data memory items and setting memory items are saved to separate memory areas.)

Data Memory Items
Information such as records of source values and measurement values and program sweep output data can be stored.

Press the (M SAVE) SAVE key to save data and the (M LOAD) LOAD key to display (confirm) data.

Number of storable items: 100 (No. 0 to No. 99)

Stored items:	Save date and time	
	Source	FUNCTION, RANGE, and source values When PULSE is selected with FUNCTION: Frequency, amplitude, and pulse number
	Measurement	MEASURE ON/OFF, FUNCTION, RANGE, and measurement values
	Setting mode	Contact input and temperature scale standard

Setting Memory Items
Conditions that have been previously saved in setting mode can be reproduced.Press the SAVE + ENTER keys to save data and the LOAD + ENTER key to load data.

Number of storable items: 21 (No. 0 to No. 20)
No. 0 becomes the initial setting (default value) at power on.

Stored items:	Save date and time	
	Source	FUNCTION, RANGE, and source values When PULSE is selected with FUNCTION: Frequency, amplitude, and pulse number
	Measurement	MEASURE ON/OFF, FUNCTION, RANGE, and measurement values
	Setting mode	Source: Interval and built-in RJ sensor Measurement: Averaging and contact input Common: Auto power off, communication, and temperature scale standard

Tip

The following items cannot be saved:

SOURCE ON/OFF state, 24V LOOP ON/OFF state, divided output (n/m) state (n and m setting values), sweep output state (setting), backlight on/off state, NiMH battery charge state

6.1 Data Memory Items

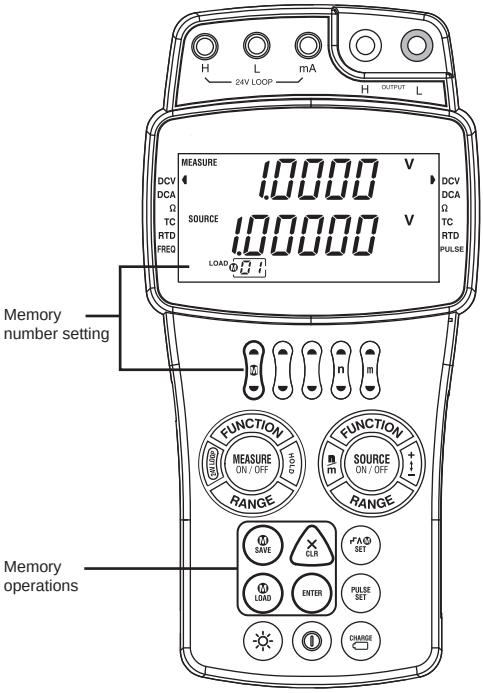

6.1.1 Saving

1 Press the SAVE key when a source value or measurement value is displayed.
MEM No. (memory number) appears.
The next number after the largest used (saved) number appears.
2 Use the ▲ ▼ M key to change the memory number.
3 Press the ENTER key. The data is saved and save mode is canceled.
(To not save the data, press the SAVE key to cancel save mode.)

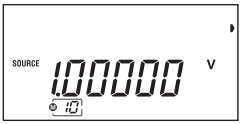

Tip

To confirm saved data, press the LOAD key.
After pressing the LOAD key, use the ▲▼ M key to select the memory number to confirm. The save date and time appear and then the data appears.

6.1.2 Replacing and Saving

Follow the procedure below to replace saved data (a memory number).

1 Press the SAVE key. (Save mode)
MEM No. (memory number) appears.
2 Use the ▲ ▼ M key to select a memory number.
3 Press the ENTER key. If data exists for the memory number, a replace confirmation indication appears.
4 Press the ENTER key again to replace the data.
The instrument returns to normal (source/measurement) mode.
(To not replace the data, press the SAVE key to cancel the operation.)

Replace confirmation indication

6.1.3 Clearing Memory

Follow the procedures below to clear (delete) saved data.

Clearing Selected Memory Number

1. Press the SAVE key. (Save mode) MEM No. (memory number) appears.
2. Use the ▲ ▼ M key to select a memory number.
3. Press the CLEAR key.
4. The clear confirmation indication appears.
5. Press the ENTER key to clear the data.
   (To not clear the data, press the SAVE key to cancel the operation.)

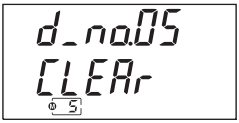

Clear confirmation indication

Clearing All Memory Numbers

1. Press the SAVE key. (Save mode)
   MEM No. (memory number) appears.
2. Use the ▲ ▼ M key to select a memory number.
3. Press the CLEAR key.
4. Press the CLEAR key again.
5. The clear all confirmation indication appears.
6. Press the ENTER key to clear all the memory numbers.
   (To not clear the data, press the SAVE key to cancel the operation.)

Clear confirmation indication

Tip

To return to normal (source/measurement) mode from save mode,
press the SAVE key again while MEM No. (memory number) is displayed.

6.1.4 Displaying (Confirming) Saved Data

Follow the procedures below to display (confirm) saved data.

1. Press the LOAD key. (Confirmation mode)
   MEM No. (memory number) and LOAD appear.
2. Use the ▲ ▼ M key to select a memory number.
3. The save date and time appear.
4. The saved data appears.

Follow the procedure below to clear saved data.

1. Press the LOAD key. (Confirmation mode)
   MEM No. (memory number) and LOAD appear.
2. Use the ▲ ▼ M key to select a memory number.
3. The save date and time appear.
4. The saved data appears.
5. Press the CLEAR key.
6. The clear confirmation indication appears.
7. Press the ENTER key to clear the data.
   The indication changes to "-----."
   (To not clear the data, press the LOAD key to cancel the operation.)

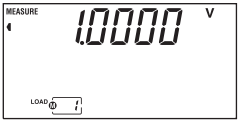

For details, refer to "6.1.3 Clearing."

Tip

To return to normal (source/measurement) mode from load mode, press the LOAD key again while MEM No. (memory number) and LOAD are displayed.

6.2 Setting Memory Items

In addition to normal mode (source/measurement) FUNCTION, RANGE, and source values (measurement values), the conditions of setting mode can also be saved.
This enables you to load saved conditions and reproduce them (reflect the state) in source and measurement modes.
The data saved to MEM No. 0 of setting memory becomes the initial setting (default value) at power on.

You can save data in MEM No. 0 to No. 20

6.2.1 Saving

1. Simultaneously press the SAVE and ENTER keys while a source or measurement value is displayed.
2. SAVE/SETUP appears and then the MEM No. (memory number) appears.
3. Use the ▲ ▼ M key to change the memory number.
4. Press the ENTER key.
   The data is saved and setting memory mode is canceled.

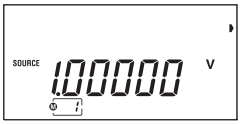

Saving to Memory Number 0
While MEM No. 1 is displayed in Step 3 above, press the ▼(down) part of the ▲ ▼ M key for at least 1 second. The number changes to MEM No. 0 and data can be saved as initial settings at power on.

Tip

To confirm saved data, simultaneously press the LOAD and ENTER keys and then use the ▲ ▼ M key to select the memory number to confirm. The saved data appears.

6.2.2 Replacing and Saving

Follow the procedure below to replace saved data (a memory number).

1. Simultaneously press the SAVE and ENTER keys.
   (Setting memory mode)
   MEM No. (memory number) appears.
2. Use the ▲ ▼ M key to select a memory number.
3. Press the ENTER key. If data exists for the memory number,
   a replace confirmation indication appears.
4. Press the ENTER key again to replace the data.
   The instrument returns to normal (source/measurement) mode.
   (To not replace the data, press the SAVE key to cancel the operation.)

Replace confirmation indication

6.2.3 Clearing Memory

Follow the procedure below to clear (delete) saved data.

Clearing Selected Memory Number

1. Simultaneously press the SAVE and ENTER keys.
   (Setting memory mode)
   MEM No. (memory number) appears.
2. Use the ▲ ▼ M key to select a memory number.
3. Press the CLEAR key.
4. The clear confirmation indication appears.
5. Press the ENTER key to clear the data.
   (To not replace the data, press the SAVE key to cancel the operation.)

Clear confirmation indication

Clearing All Memory Numbers

1. Simultaneously press the SAVE and ENTER keys.
   (Setting memory mode)
   MEM No. (memory number) appears.
2. Use the ▲ ▼ M key to select a memory number.
3. Press the CLEAR key.
4. Press the CLEAR key again.
5. The clear all confirmation indication appears.
6. Press the ENTER key to clear MEM No. 1 to No. 20.
   (No. 0 is not cleared.)
   (To not clear the data, press the SAVE or CLEAR key to cancel the operation.)

Clear confirmation indication

Tip

- If the data of No. 0 is cleared, the data is replaced with the setting conditions (initial settings) at the time of shipment.
- To return to normal (source/measurement) mode from setting memory mode, press the SAVE key again while MEM No. (memory number) is displayed.

6.2.4 Loading

Loading

1. Simultaneously press the LOAD and ENTER keys. (Load mode)
   MEM No. (memory number) and LOAD appear.
2. LOAD/SETUP appears.
3. Use the ▲ ▼ M key to select a memory number.
   If no data exists (empty) for the memory number, "-----" appears.
4. The saved data (settings) appears.
5. Press the ENTER key.
6. The setting conditions are reproduced (state is reflected) and the instrument returns to normal (source/measurement) mode.

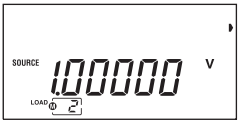

Clearing Saved Data

1. Simultaneously press the LOAD and ENTER keys. (Load mode)
   MEM No. (memory number) and LOAD appear.
2. SETUP appears.
3. Use the ▲ ▼ M key to select a memory number.
4. The saved data (settings) appears.
5. Press the CLEAR key.
6. The clear confirmation indication appears.
7. Press the ENTER key to clear the data.
   The indication changes to "-----."
   (To not clear the data, press the LOAD key to cancel the operation.)

For details, refer to "6.1.3 Clearing."

Tip

To return to normal (source/measurement) mode from load mode, press the LOAD key again while MEM No. (memory number) and LOAD are displayed.

7. Setting Mode

In the normal mode, simultaneously press the CLEAR and ENTER keys to switch to setting mode. The following table shows the items that can be set in setting mode.
(When the divided output (n/m) or a sweep function is enabled, a setting mode cannot be selected.)

Level 1	Level 2: Detailed Items		Level 3
Source SEt SrC	Interval Time	IntVAL	SLOW/FAST
	Built-in RJ Sensor	rJC	ON/OFF
	Calibration (Source)	CAL	
Measure SEt MEAS	Averaging	AVG	ON/OFF
	Contact Input	Cont	ON/OFF
	Calibration (Measure)	CAL	
Conf SEt ConF	Auto Power Off	PwrOFF	AUTO/MAN
	Communication	Con	Normal/Print
			In the case of Print: Transfer interval
	Date/Time	dAtE	Year/Month/Day
			Hour/Minute/Second
	Temperature Scale Standard	t.Std	ITS-90/IPTS-68

Basic Operating Procedure

1. Simultaneously press the CLEAR and ENTER keys. (Setting mode)
2. Use the ▲ ▼ keys to select an item. (Level 1: Source, Measure, or Configuration)
3. Press the ENTER key.
4. Use the ▲ ▼ keys to select a detailed item. (Level 2)
5. Press the ENTER key.
6. Use the ▲ ▼ keys to select a setting for the item. (Level 3)

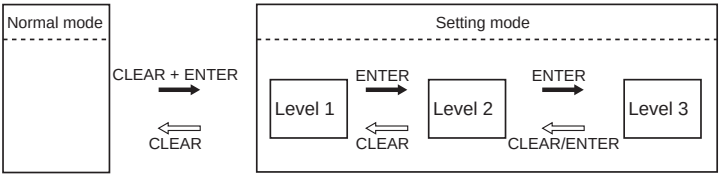

* You can press the CLEAR + ENTER keys in any level (display) in setting mode to return to normal mode.

7.1 Source

(1) Interval Time

This sets the interval time for step sweep and program sweep, as well as the sweep time for linear sweep.
(These items cannot be set individually.)

Default value: FAST

Selection	Interval Time	Linear Sweep
FAST	5 seconds	16 seconds
SLOW	10 seconds	32 seconds

For details, refer to "4.9.1 Step Sweep Function," "4.9.2 Linear Sweep Function," and "4.9.3 Program Sweep Function."

(2) Built-in RJ Sensor

This turns on or off the RJ sensor built into the instrument.

For details, refer to "4.5.3 Using the Built-in RJ Sensor."

(3) Calibration (Source)

This is a calibration mode for adjusting (calibrating) source.

For details, refer to "9. Calibration Mode."

7.2 Measure

(1) Averaging

This enables (ON) or disables (OFF) the moving averaging process for measurement data. (default value: ON)
If the reading (measurement value) fluctuates as a result of, for example, noise being included in the input signal, use the averaging function.

1. Simultaneously press the CLEAR and ENTER keys to switch to setting mode.
2. Use the ▲ ▼ keys to select Measure.
3. Press the ENTER key to confirm the selection.
4. Use the ▲ ▼ keys to select the averaging setting.
5. Press the ENTER key to confirm the selection.
6. Use the ▲ ▼ keys to select ON or OFF.

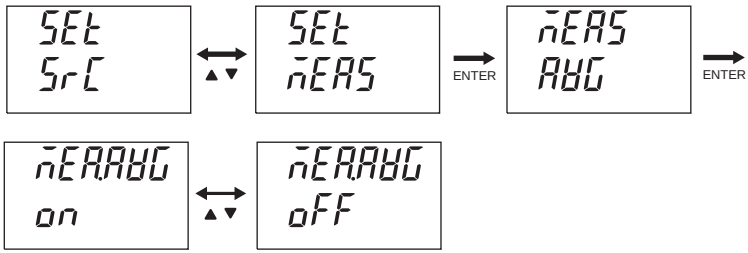

To return to normal mode from setting mode,
simultaneously press the CLEAR and ENTER keys.
(Press the CLEAR key to go back one level.)

(2) Contact Input

The instrument can measure transistor contact on/off signals during frequency measurement (FREQ).
The initial value is OFF.
When ON is set and frequency (FREQ) is set with FUNCTION, the ∿ mark appears.

For details, refer to "5.7.2 Measuring Contact Input."

(3) Calibration (Measure)

This is a calibration mode for adjusting (calibrating) measurement.

For details, refer to "9. Calibration Mode."

7.3 Configuration

(1) Auto Power Off

When auto power off is set, the whole LCD screen flashes
if approximately 9 minutes 30 seconds elapse without a key being pressed.
If no operation is performed within approximately 30 seconds after that,
the power turns off automatically.
(This function is for when the instrument is running on batteries.)
(default value: AUTO = the power turns off automatically)

1. Simultaneously press the CLEAR and ENTER keys to switch to setting mode.
2. Use the ▲ ▼ keys to select configuration.
3. Press the ENTER key to confirm the selection.
4. Use the ▲ ▼ keys to select the auto power off setting.
5. Press the ENTER key to confirm the selection.
6. Use the ▲ ▼ keys to select AUTO or MANUAL.

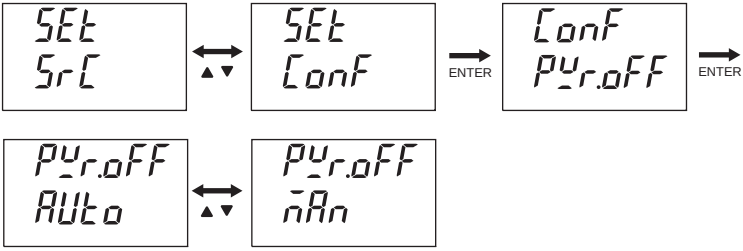

To return to normal mode from setting mode,
simultaneously press the CLEAR and ENTER keys.
(Press the CLEAR key to go back one level.)

Tip

If the AC adapter is in use or the CPH range is selected for pulse measurement,
the instrument is not turned off automatically regardless of the auto power off setting.

(2) Communication

You can select normal mode and printer mode for communication.
(defaultvalue: Normal mode)

Normal mode: Enables normal sending and receiving.

Printer mode: Enables a source value and measurement value to be output to a printer at a specified interval* (0 to 3600 seconds).

*: If the transfer interval of printer mode is set to 0 seconds, 1 data item is output each time the HOLD key is pressed. If a transfer interval other than 0 seconds is set, pressing the HOLD key starts communication and outputs data in accordance with the transfer interval, and pressing the HOLD key again stops communication.

1. Simultaneously press the CLEAR and ENTER keys to switch to setting mode.
2. Use the ▲ ▼ keys to select Configuration.
3. Press the ENTER key to confirm the selection.
4. Use the ▲ ▼ keys to select the communication setting.
5. Press the ENTER key to confirm the selection.
6. Use the ▲ ▼ keys to select Normal or Printer.
   If you select Printer, next set the transfer interval.

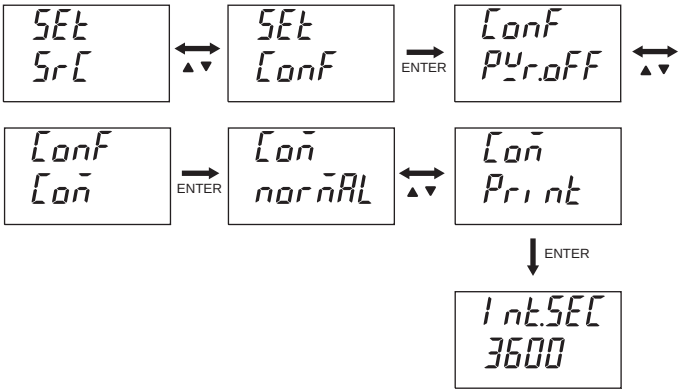

To return to normal mode from setting mode, simultaneously press the CLEAR and ENTER keys.
(Press the CLEAR key to go back one level.)

(3) Date/Time

You can set the date and time.
(These settings are set to Japan time at the time of shipment.)
Top row: Year (2 digits)/Month/Day
Bottom row: Hour/Minute/Second

1. Simultaneously press the CLEAR and ENTER keys to switch to setting mode.
2. Use the ▲ ▼ keys to select Configuration.
3. Press the ENTER key to confirm the selection.
4. Use the ▲ ▼ keys to select the date/time setting.
5. Press the ENTER key to confirm the selection.
6. Use the ▲ ▼ keys to set year/month/day on the top row. (Flashes)
7. Press the ENTER key to confirm the setting.
8. Use the ▲ ▼ keys to set hour/minute/second on the bottom row. (Flashes)

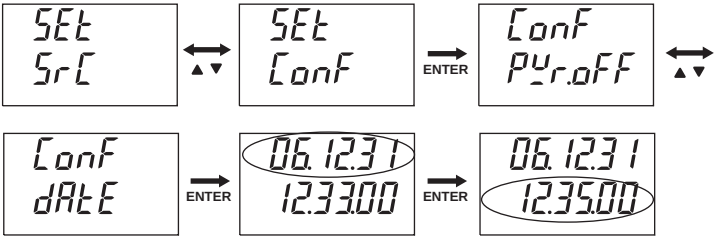

To return to normal mode from setting mode, simultaneously press the CLEAR and ENTER keys.
(Press the CLEAR key to go back one level.)

(4) Temperature Scale Standard

You can select from ITS-90 and IPTS-68 for the temperature scale standard.
(default setting: ITS-90)

ITS-90:	1990 International Temperature Scale
IPTS-68:	1968 International Practical Temperature Scale

For details, refer to "4.6 Generating Resistance Temperature Detector (RTD) Signals"

8. Communication Function

You can configure the instrument and confirm setting values and measurement values from a personal computer.

NOTE

You can use a communication cable to connect the instrument to an RS232 compliant serial port of a personal computer, etc.
In printer mode, you can output source values and measurement values at preset intervals.

8.1 Cable Connection and Interface Specifications

Cable Connection
Recommended communication cable
RS232 (D-SUB 9-pin) cross cable

Connect the communication cable to the RS232 connector on the side of the instrument.

RS232 Settings

Baud rate:	9600 bps
Parity:	None
Stop bit:	1 bits
Data length:	8 bits
Flow control:	None (Xon/Xoff control for printing only)
Terminator:	Fixed to CrLf

8.2 Communication Command List

Command	Description	When Normal	When Setting
AS	Sets and queries the source/SINK of the current (DCA)	O	X
BL	Queries whether the back light is on or off	O	X
BT	Starts charging the batteries when the AC adapter is connected	O	X
CD	Sets the source value during calibration	X	O
CL	Sets and queries the calibration item	X	O
CMF	Sets and queries the calibration measurement function	X	O
CP	Sets the calibration point	X	O
CS	Sets the measurement value during calibration	X	O
CSF	Sets and queries the calibration source function	X	O
CW	Writes the calibration data	X	O
DT	Sets and queries the date and time	X	O
DW	Decreases the m(th) digit of the source value by 1 digit	O	O
ESC C/RC	Initializes the setting information (setting conditions)	O	X
ESC S	Outputs the status byte	O	O
H	Sets and queries the output header of the OD and OM commands	O	O
HD	Holds and queries the measurement value indication	O	X
IM	Sets and queries the mask of status byte	O	O
MF	Sets and queries the measurement function	O	X
MO	Turns on/turns off and queries the measurement value indication	O	X
MR	Sets and queries the measurement range	O	O
ND	Sets and queries the n and m values for divided output (n/m)	O	X
NM	Sets and queries divided output (n/m)	O	X

Command	Description	When Normal	When Setting
OB	Queries the battery charge state	O	X
OD	Outputs the measurement values	O	O
OE	Outputs the error information	O	O
OM	Requests sending of memory data	O	X
OR	Queries whether an external RJ sensor is connected	O	X
OS	Outputs the setting information (conditions)	O	X
PU	Sets and queries display of PULSE (source)	O	X
SD	Sets and queries the source values	O	X
SF	Sets and queries the source function	O	X
SO	Starts/stops and queries source	O	O
SR	Sets and queries the source range	O	O
SY	Switches and queries normal mode and calibration mode	O	O
TE	Sets and queries TC and RTD (source) display	O	X
TT	Sets and queries the international temperature standard	X	O
UP	Increases the m (th) digit of the source value by 1 digit	O	O
VO	Sets and queries start/stop of 24 V DC (LOOP) power supply	O	X

8.3 Detailed Description of Commands

Setting and Control

Command:	Send command syntax
Answer:	Return data syntax of command (setting, control) with no response. When an error occurs, the same data as that of the error message ERRm (m = error number) displayed on the LCD is returned.

Query

Command:	Send command syntax
Return:	Return data syntax of command (query) with response.

Operating Condition by Mode

Normal:	The command can be used during normal measurement/ source operation.
Setting:	The command can be used in setting mode (Chapter 7) or calibration mode (Chapter 9).

For details on whether each command can be used in other modes, refer to "8.5 Table of Valid Communication Commands."

AS	Sets and queries the source/SINK of the current (DCA)	Normal	Setting
	Command = ASm<Delimiter> ⟶ Answer = ASm <Delimiter> Command = AS?<Delimiter> ⟶ Return = ASm <Delimiter> Parameter m=0: Source (Generation)/1:SINK (Draw in) When the current source setting value is 0 mA and the measurement function is other than DCA, an error is returned.	○	×

BL	Queries whether the back light is on or off	Normal	Setting
	Command = BLm<Delimiter> ⟶ Answer = BLm <Delimiter> Command = BL?<Delimiter> ⟶ Return = BLm <Delimiter> Parameter m=0: Off/1: On default value of m = 0 (Off)	○	×

BT	Starts charging the batteries when the AC adapter is connected	Normal	Setting
	Command = BT<Delimiter> An error is generated in the following cases (LCD indication) • AC power supply is not connected (Err 14) • Charging has already started (Err 12) Use the OB command to confirm the charge state.	○	×

Note:
At the beginning of using communication function send "ESC C" or "RC" command in order to initialize the unit.

CD	Sets the source value during calibration	Normal	Setting
	Command = CD<Delimiter> ⟶ Answer = CD <Delimiter> During generation in calibration mode, sets the current output source values as the calibration values for the selected function, range, and scale (+FS/0).	×	○*

CL	Sets and queries the calibration item	Normal	Setting
	Command = CLm<Delimiter> ⟶ Answer = CLm <Delimiter> Command = CL?<Delimiter> ⟶ Return = CLm <Delimiter> Parameter m=3: (Calibration) Source/4: (Calibration) Measure	×	○*

CMF	Sets and queries the calibration measurement function	Normal	Setting
	Command = CMFm<Delimiter> ⟶ Answer = CMFm <Delimiter> Command = CMF?<Delimiter> ⟶ Return = CMFm <Delimiter> Parameter m=0: DCV/1: DCA/2: Ω default Value of m=0 (DCV)	×	○*

CP	Sets the calibration point	Normal	Setting
	Command = CPm<Delimiter> ⟶ Answer = CPm <Delimiter> Parameter m=0: + FS Calibration/1: + Zero Calibration/2: -FS Calibration	×	○*

CS	Sets the measurement value during calibration	Normal	Setting
	Command = CS<Delimiter> ⟶ Answer = CS <Delimiter> During measurement in calibration mode, sets the current input measurement values as the calibration values for the selected function, range, and scale (+FS/0/-FS).	×	○*

CSF	Sets and queries the calibration source function	Normal	Setting
	Command = CSFm<Delimiter> ⟶ Answer = CSFm <Delimiter> Command = CSF?<Delimiter> ⟶ Return = CSFm <Delimiter> Parameter m=0: DCV/1: DCA/2: Ω default Value of m=0 (DCV)	×	○*

CW	Writes the calibration data	Normal	Setting
	Command = CW<Delimiter> ⟶ Answer = CW, OK<Delimiter> (Normal End) Writes to EEPROM after calibrating each function and range. If the power is turned off without executing this command, the values that were calibrated just before are discarded.	×	○*

*: Can only be used in calibration mode of setting mode.

DT	Sets and queries the date and time	Normal	Setting
	Command = DTyyyymmddhhmmss<Delimiter> ⟶ Answer = DTyyyymmddhhmmss<Delimiter> Command = DT? (CrLf) ⟶ Return = yyyyy/mm/dd, hh:mm:ss<Delimiter> Parameter (default Value) yyyy: Year (2006) 4 byte, mm: Month (04) 2 byte, dd: Day (01) 2 byte hh: Hour (00) 2 byte, mm: Minute (00) 2 byte, ss: Second (00) 2 byte Setting (confirmation) of the 2 leftmost digits of the year is only possible for the communication function. (Using the operation keys to change the values of the 2 leftmost digits on the LCD will not move up or down to the 2 rightmost digits.)	×	○

DW	Decreases the m (th) digit of the source value by 1 digit	Normal	Setting
	Command = DWm<Delimiter> ⟶ Answer = DW, OK<Delimiter> Parameter m = 1 to 5 (1: Least Significant Digit to 5: Most Significant Digit)	○	○

ESC C or RC	Initializes the setting information (setting conditions) ("ESC" = ASCII 0 &batu&1B)	Normal	Setting
	Command = ESC C<Delimiter or Command = RC <Delimiter> The following settings (common setting item) are not initialized. • Auto power off setting • Communication setting • International temperature standard selection (ITS-90/IPTS-68) • Time setting	○	×

ESC S	Outputs the status byte ("ESC" = ASCII 0 x 1B)	Normal	Setting
	Command = ESC S<Delimiter> The status byte is output. (Decimal number) (Refer to "8.6 Status Byte Format.")	○	○

H	Sets and queries the output header of the OD and OM commands	Normal	Setting
	Command = Hm<Delimiter> ⟶ Answer = Hm <Delimiter> Command = H?<Delimiter> ⟶ Return = Hm <Delimiter> Parameter m=0: No/1: Yes default Value of m=0 (No)	○	○

HD	Holds and queries the measurement value indication	Normal	Setting
	Command = HDm<Delimiter> ⟶ Answer = HDm <Delimiter> Command = HD?<Delimiter> ⟶ Return = HDm <Delimiter> Parameter m=0: Indication Update/1: Indication Hold	○	×

IM	Sets and queries the mask of status byte	Normal	Setting
	Command = IMm<Delimiter> ⟶ Answer = IMm <Delimiter> Command = IM?<Delimiter> ⟶ Return = IMm <Delimiter> Performs detection or sets mask for each bit of status byte. If IM0 is set, all information bits are masked. If IM63 is set, the current operating conditions are reflected for all information bits. (No mask) Parameter m = 0 to 63 (Decimal number) 1: Detects bit 0 (Measurement Ends) 2: Detects bit 1 (Output Change Ends) 4: Detects bit 2 (Syntax Error) 8: Detects bit 3 (Overrange) 16: Detects bit 4 (24 V Loop Output Error) 32: Detects bit 5 (Error During Output) (Bits 6 and 7 of the status byte are fixed bits.) default Value of m = 63 (No Mask)	○	○

MF	Sets and queries the measurement function	Normal	Setting
	Command = MFm<Delimiter> ⟶ Answer = MFm <Delimiter> Command = MF?<Delimiter> ⟶ Return = MFm <Delimiter> Parameter m=0: DCV/1: DCA/2: &ohm&/3: TC/4: RTD/5: Freq	○	×

MO	Turns on/turns off and queries the measurement value indication	Normal	Setting
	Command = MOm<Delimiter> ⟶ Answer = MOm <Delimiter> Command = MO?<Delimiter> ⟶ Return = MOm <Delimiter> Parameter m=0: Turn off/1: turn on	○	×

MR	Sets and queries the measurement range	Normal	Setting
	Command = MRm<Delimiter> ⟶ Answer = MRm <Delimiter> Command = MR?<Delimiter> ⟶ Return = MRm <Delimiter> Parameter [DCV] m = 0: 500 mV/1: 5 V/2: 35 V [DCA] m = 0: 20 mA DC/1: 100 mA DC [Ω] m = 0: 500 Ω/1: 5 kΩ/2: 50 kΩ [TC] m = 0: K/1: E/2: J/3: T/4: R/5: B/6: S/7: N/8: L/9: U [RTD] m = 0: PT100/1: JPT100 [Freq] m = 0: 100 Hz/1: 1000 Hz/2: 10 kHz/3: CPM/4: CPH	○	○

ND	Sets and queries the n and m values for divided output (n/m)	Normal	Setting
	Command = NDnm<Delimiter> ⟶ Answer = NDnm <Delimiter> Command = ND?<Delimiter> ⟶ Return = NDnm <Delimiter> Parameter n = n value (2 digits from 00 to 19, n ≤ m) m = m value (2 digits from 01 to 19, n ≤ m) default Value of n = 01 and m = 01	○	○

NM	Sets and queries divided output (n/m)	Normal	Setting
	Command = NMm<Delimiter> ⟶ Answer = NMm <Delimiter> Command = NM?<Delimiter> ⟶ Return = NMm <Delimiter> Parameter m = 0: Off/1: On default Value of m = 0 (Off)	○	×

OB	Queries the battery charge state	Normal	Setting
	Command = OB<Delimiter> ⟶ Return = m <Delimiter> Parameter m = 0: Off 1: On (Charging) A query of the charge state can executed approximately 2 seconds after the CHARGE key has been pressed (or the BT command has been sent).	○	×

OD	Outputs the measurement values	Normal	Setting
	Command = OD<Delimiter> ⟶ Return = abcde <Delimiter> Parameter <Header Section (4 bytes)> a = V: Voltage/A: Current/O: Resistance/T: Temperature/F: Frequency b = DC: Direct Current/ AC: Alternating Current/R3: Three-wire Method Resistance Measurement c = N: Normal/O: Overrange/E: No Data/B: Burnout <Data Section (10 Bytes)> d = Measurement Value (7 digits) e = E+0/E+3/E-3 (When overrange, no data, and burnout: de = 99999.E+3)	○	○

OE	Outputs the error information	Normal	Setting
	Command = OE<Delimiter> ⟶ Return = ERRm <Delimiter> Outputs the last error generated After the output is returned, the save error number is overwritten with "ERR00<Delimiter>." If no error occurs, "ERR00<Delimiter>" is returned. Parameter m = Error Code Number	○	○

OM	Requests sending of memory data	Normal	Setting
	Command = OMm<Delimiter> ⟶ Return = n <Delimiter> Query of memory data Parameter m = Memory Data Number (0 to 99) n = Date, Time, Measurement Values, Source Values, [PULSE Source Amplitude] <Delimiter> = yyyy/mm/dd, hh:mm:ss, abcde, fghij [, fghij] <Delimiter> Date yyyy/mm/dd = yyyy (Year) mm (Month) dd (Day) hh:mm:ss = Time Measurement Value Header Section a = V: Voltage/A: Current/O: Resistance/T: Temperature/F: Frequency b = DC: Direct Current/ AC: Alternating Current/Blank: Nothing Applicable c = N: Normal/O: Overrange/E: No Data (When no data: abc = E) Measurement Data Section d = Measurement Value (7 digits) e = E+0/E+3/E-3 (When overrange and no data: de = 99999.E+3) Source Value Header Section f = V: Voltage/A: Current/O: Resistance/T: Temperature/F: Frequency g = DC: Direct Current/ AC: Alternating Current/Blank: Nothing Applicable h = N: Normal/E: No Data (When no data: abc = E) Source Value Data Section i = Source Value (8 Digits) j = E+0/E+3/E-3 (When no data: de = 99999.E+3)	○	×

OR	Queries whether an external RJ sensor is connected	Normal	Setting
	Command = OR<Delimiter> ⟶ Return = m <Delimiter> Parameter m = 0: disconnected/1: connected	○	×

OS	Outputs the setting information (conditions)	Normal	Setting
	Command = OS<Delimiter> ⟶ Return = Measure a<Delimiter> Function b<Delimiter> Range c<Delimiter> Source d<Delimiter> Function e<Delimiter> Range f<Delimiter> Data g<Delimiter> 24 V Output h<Delimiter> Light i<Delimiter> Charge j<Delimiter> Parameter a (Measure) = ON/OFF b (Measure Function) = DCV/DCA/OHM/TC/RTD/FREQ c (Measure Range) = (DCV) 35 V/5 V/500 mV (DCA) 100 mA/20 mA (OHM) 50 kOHM/5 kOHM/500 OHM (TC) K/E/J/T/R/B/S/N/L/U (RTD) PT100/JPT100 (FREQ) 100 Hz/1000 Hz/10 kHz/CPM/CPH d (Source) = ON/OFF e (Source Function) = DCV/DCA/OHM/TC/RTD/PULSE f (Source Range) = (DCV) 100 mV/1 V/10 V/30 V (DCA) 20 mA/4-20 mA (OHM) 500 OHM/5 kOHM/50 kOHM (TC) K/E/J/T/R/B/S/N/L/U (RTD) PT100/JPT100 (FREQ) 100 Hz/1000 Hz/10 kHz/50 kHz/CPM g (Source Value) h (Output for 24 V LOOP Measurement) = ON/OFF i (Backlight) = ON/OFF j (Charging) = OFF/ON	○	×

PU	Sets and queries display of PULSE (source)	Normal	Setting
	Command = PUm<Delimiter> ⟶ Answer = PUm <Delimiter> Command = PU?<Delimiter> ⟶ Return = PUm <Delimiter> Parameter m = 0: Frequency/1: Amplitude/2: Pulse Number default Value m = 0 (Frequency) This can only be set and queried when the source function is PULSE.	○	×

SD	Sets and queries the source values	Normal	Setting
	Command = SDm<Delimiter> ⟶ Answer = SDm <Delimiter> Command = SD?<Delimiter> ⟶ Return = SDm <Delimiter> Parameter m = Source Values 100m V m = 0 to ±110.000 mV 1 V m = 0 to ±1.10000 V 10 V m = 0 to ±11.0000 V 30 V m = 0 to ±30.00 V 20 mA, 4-20 mA m = 0 to +22.000 mA 20 mA SINK m = 0 to -22.000 mA 500 Ω m = 0 to 550.00 Ω 5 kΩ m = 0 to 5.5000 kΩ 50 kΩ m = 0 to 55.000 kΩ PT100 m = -200.0 to 850.0 °C PT100 (ITPS-68) m = -200.0 to 650.0 °C JPT100 m = -200.0 to 500.0 °C K m = -200.0 to 1372.0 °C E m = -200.0 to 1000.0 °C J m = -200.0 to 1200.0 °C T m = -200.0 to 400.0 °C N m = -200.0 to 1300.0 °C L m = -200.0 to 900.0 °C U m = -200.0 to 400.0 °C R m = 0 to 1768 °C S m = 0 to 1768 °C B m = 600 to 1820 °C 100 Hz (*1) m = 1.00 to 110.00 Hz 1000 Hz (*1) m = 90.0 to 1100.0 Hz 10 kHz (*1) m = 0.9 kHz to 11.0 kHz 50 kHz (*1) m = 9 kHz to 50 kHz 1000 CPM m = 1.0 to 1100.0 CPM PULSE DCV (*2) m = 0 to 11.0000 V PULSE Cycle (*3) m = 0 (cont), 1 to 60000 cycle *1: When the PULSE source display setting is frequency, only (PU0) can be set *2: When the PULSE source display setting is amplitude, only (PU1) can be set *3: When the PULSE source display setting is pulse number, only (PU2) can be set	○	×

SF	Sets and queries the source function	Normal	Setting
	Command = SFm<Delimiter> ⟶ Answer = SFm <Delimiter> Command = SF?<Delimiter> ⟶ Return = SFm <Delimiter> Parameter m = 0: DCV/1: DCA/2: Ω/3: TC/4: RTD/5: Pulse Set the PULSE source DCV and cycle of each parameter with the PU command.	○	×

SO	Starts/stops and queries source	Normal	Setting
	Command = SOm<Delimiter> ⟶ Answer = SOm <Delimiter> Command = SO?<Delimiter> ⟶ Return = SOm <Delimiter> Parameter m = 0: Stop/1: Start	○	○

SR	Sets and queries the source range	Normal	Setting
	Command = SRm<Delimiter> ⟶ Answer = SRm <Delimiter> Command = SR?<Delimiter> ⟶ Return = SRm <Delimiter> Parameter [DCV] m = 0: 100 mV/1: 1 V/2: 10 V/3: 30V [DCA] (When normal) m = 0: 20 mA/1: 4-20 mA (When Calibrating) m = 0: 20 mA/2: 20 mA SINK [Ω] (When normal) m = 0: 500 Ω/1: 5 kΩ/2: 50 kΩ (When Calibrating) m = 0: 500 Ω (1 mA)/1: 5 kΩ (0.1 mA)/ 2: 50 kΩ (0.05 mA)/ 3: 500 Ω (5 mA)/4: 5 kΩ (0.5 mA) [TC] m = 0: K/1: E/2: J/3: T/4: R/5: B/6: S/ 7: N/8: L/9: U [RTD] m = 0: PT100/1: JPT100 [PULSE] m = 0: 100 Hz/1: 1000 Hz/2: 10 kHz/3: 50 kHz/4: 1000 CPM	○	○

SY	Switches and queries normal mode and setting mode	Normal	Setting
	Command = SYm<Delimiter> ⟶ Answer = SYm <Delimiter> Command = SY?<Delimiter> ⟶ Return = SYm <Delimiter> Parameter m = 0: Normal Mode/1: Setting Mode default Value m = 0 (Normal Mode)	○	○

TE	Sets and queries TC and RTD (source) display	Normal	Setting
	Command = TEm<Delimiter> ⟶ Answer = TEm <Delimiter> Command = TE?<Delimiter> ⟶ Return = TEm <Delimiter> Parameter m = 0: Temperature Value/1: mV Value (Resistance Value)/2: Room Temperature default Value m = 0 (Temperature Value)	○	×

TT	Sets and queries the international temperature standard	Normal	Setting
	Command = TTm<Delimiter> ⟶ Answer = TTm <Delimiter> Command = TT?<Delimiter> ⟶ Return = TTm <Delimiter> Parameter m = 0: IPTS-68/1: ITS-90 default Value m = 1 (ITS-90)	×	○

UP	Increases the m (th) digit of the source value by 1 digit	Normal	Setting
	Command = UPm<Delimiter> ⟶ Answer = UP, OK <Delimiter> Parameter m = 1 to 5 (1: Least Significant Digit to 5: Most Significant Digit)	○	○

VO	Sets and queries start/stop of 24 V DC (LOOP) power supply	Normal	Setting
	Command = VOm<Delimiter> ⟶ Answer = VOm <Delimiter> Command = VO?<Delimiter> ⟶ Return = VOm <Delimiter> This controls the ON/OFF of output of 24 V LOOP measurement power supply (output from measurement terminals). This can only be set when the measurement function is DCA. Parameter m = 0: Stop Supply/1: Start Supply Initial Value m = 0 (Stop Supply)	○	×

8.4 Error Code List

Indication	Description
Err 00	No error (No error code is displayed on the LCD)
Err 11	Received a command that is not used by the instrument
Err 12	The parameter specified for the command is incorrect
Err 13	Received a command that cannot be executed due to the instrument state
Err 14	Attempted to charge the battery when no AC power supply is connected
Err 15	Attempted to charge the battery when no NiMH battery is connected
Err 16	Detected error during calibration
Err 20	24 V DC (LOOP) measurement power supply error
Err 23	The current or voltage of the source output has become excessive
Err 60	The setting value storage information of the EEPROM is inappropriate
Err 61	The measurement calibration value storage information of the EEPROM is inappropriate
Err 62	The source calibration value storage information of the EEPROM is inappropriate
Err 79	ROM check error at power on
Err 80	RAM check error at power on

8.5 Table of Valid Communication Commands

X: Invalid (restricted)
Blank: Valid

	Normal Mode	Calibration Mode	Memory Mode	Setting Mode	Linear Sweep Mode	Step Sweep Mode	n/m Mode	Program Sweep Mode	Measure ment Off
AS		×		×	×	×	×	×	
BL		×		×					
BT		×		×					
CD	×		×	×	×	×	×	×	
CL	×		×		×	×	×	×	
CMF	×		×	×	×	×	×	×	
CP	×		×	×	×	×	×	×	
CS	×		×	×	×	×	×	×	
CSF	×		×	×	×	×	×	×	
CW	×		×	×	×	×	×	×	
DT	×		×		×	×	×	×	
DW			×	×	×	×	×	×	
ESC C		×		×					
ESC S									
H									
HD?		×		×					×
HDm		×	×	×	×	×	×	×	×
IM									
MF		×	×	×					
MO?									
MOm		×	×	×				×	
MR?									
MRm	*3	*3	×	×	*3	*3	*3	×	×
ND?		×		×					
NDm		×		×	×	×		×	
NM?		×		×					
NMm		×	×	×	×			×	

*3: When the temperature (TC, RTD) display function is selected for both source and measurement, the settings selected for the thermocouple and resistance temperature detector on the source side take priority.

X: Invalid (restricted)
Blank: Valid

	Normal Mode	Calibration Mode	Memory Mode	Setting Mode	Linear Sweep Mode	Step Sweep Mode	n/m Mode	Program Sweep Mode	Measure ment Off
OB		×		×					
OD									×
OE									
OM		×	×	×				×	
OR		×		×					
OS		×		×					
PU?		×		×	×	×	×	×	
PUm		×	×	×	×	×	×	×	
SD?		×		×					
SDm		×	×	×	×	×	×	×	
SF		×	×	×					
SO?									
SOm			×	×					
SR?									
SRm			×	×	×	×	×	×	
SY?									
SYm			×		×	×	×	×	
TE?		×	×	×					
TEm		×	×	×	×	×	×	×	
TT	×		×		×	×	×	×	×
UP			×	×	×	×	×	×	
VO		×		×					

*3: When the temperature (TC, RTD) display function is selected for both source and measurement, the settings selected for the thermocouple and resistance temperature detector on the source side take priority.

8.6 Status Byte Format

Description of the ESC S Command

bit 7	bit 6	bit 5	bit 4	bit 3	bit 2	bit 1	bit 0
0 (Fixed)	0 (Fixed)	Output Error	24 V Power Supply Error	Overrange	Syntax Error	Output Change Complete	Measurement End

bit 7: Fixed to 0

bit 6: Fixed to 1

bit 5: Becomes 1 if an error occurs during output.
(MAIN CPU [OVERLOAD] terminal input reflected)

bit 4: Becomes 1 if an error occurs with 24 V loop measurement power supply.
(MAIN CPU [/24VOVF] terminal input reflected)
The information is retained until the status byte is retrieved.

bit 3: Becomes 1 if a measurement value overrange occurs.
The information is retained until the status byte is retrieved.

bit 2: Becomes 1 when a prohibited operation or command was processed, a command could not be interpreted, or a parameter is out of the setting range.
The information is retained until the status byte is retrieved.

bit 1: Becomes 1 when output is stable after an output value is changed in the output ON state.
The information is retained until the status byte is retrieved.

bit 0: Becomes 1 when the measurement data is confirmed during measurement.
The information is retained until the status byte is retrieved.

8.7 Output Format of Printer Mode

Source setting values and measurement values are output in printer mode (when a printer is connected). The output format is 29 characters per line.

Example of Output

When Source OFF and Measure OFF

```
Source:  OFF
Measure: OFF
```

When Source OFF and Measure ON

```
Source:  OFF
Measure: Range      35V
         Data       0.000V
         Average    OFF
```

When Source ON and Measure OFF

```
Source:  Function   DCV
         Range      100mV
         Data       0.000mV
Measure: OFF
```

When Source ON and Measure ON

```
Source:  Function   DCV
         Range      100mV
         Data       0.000mV
Measure: Range      35V
         Data       0.000V
         Average    OFF
```

9. Calibration Mode

To maintain high accuracy, it is recommended to calibrate the instrument once a year. This section describes the calibration procedure using the standard devices recommended in "Standard Device Selection."

(1) Standard Device Selection

Source Function

Function	Standard Device	Range	Accuracy
DCV	• Digital multimeter	100 mV	0.002% + 1 µV
		1 V	0.002% + 5 µV
		10 V	0.002% + 0.05 mV
		30 V	0.002% + 1 µV
DCA		20 mA	0.0035% + 0.5 µA
	• Digital multimeter	20 mA SINK	0.0035% + 0.5 µA
Ω	• DC voltage/current standard	500 Ω	0.002% + 0.01 Ω
		5 kΩ	0.005% + 0.15 Ω
		50 kΩ	0.01% + 5 Ω

Measurement Function

Function	Standard Device	Range	Accuracy
DCV	• DC voltage/current standard	500 mV	0.002% + 5 µV
		5 V	0.002% + 50 µV
		35 V	0.0025% + 0.5 mV
DCA		20 mA	0.0025% + 0.4 µA
		100 mA	0.004% + 3 µA
Ω	Reference resistor	500 Ω	0.0055% + 7.5 mΩ
		5 kΩ	0.0055% + 0.75 Ω
		50 kΩ	0.055% + 1 Ω

(2) Required Environment and Conditions for Calibration

Ambient temperature: 23 ±1°C

Relative humidity: 45% to 75%

Warm-up time:

The standard devices must be warmed up for the specified times and the instrument must be warmed up for at least 2 hours (for calibration).

9.1 Calibration of Source Functions (Adjustment)

(1) Calibration Points and Calibration Ranges

Using the ▲ ▼ output setting value keys, adjust the output values so that the readings on the standard device (CA150 source values) match the calibration points shown below.

Function	Range	Calibration Point		Condition	Connection Diagram
		ZERO	Full Scale		
DCV	100 mV	0 mV	100.000 mV	—	<1>
	1 V	0 V	1.00000 V	—	
	10 V	0 V	10.0000 V	—	
	30 V	0 V	30.00 V	—	
DCA	20 mA	0 mA	20.000 mA	—	<2>
	20 mA SINK	0 mA	-20.000 mA	External voltage of 28 V	<3>
Ω	L 500 Ω	0 mV*	500.00 mV	Excitation current of 1 mA	<4>
	H 500 Ω	0 mV*	2500.00 mV	Excitation current of 5 mA	
	L 5 kΩ	0 mV	500.00 mV	Excitation current of 0.1 mA	
	H 5 kΩ	0 mV	2500.00 mV	Excitation current of 0.5 mA	
	50 kΩ	0 m V	2500.00 mV	Excitation current of 0.05 mA	

⚠ CAUTION

- **About Resistance (500 Ω) Internal Offset Calibration**

  ***: When performing zero point calibration, make sure the voltage between the H and L terminals is within approximately ±20 μV (±0.02 mV). If this value is exceeded, the instrument needs to be repaired (internal calibration).**
- **About Resistance Excitation Current**

  When calibrating the 500 Ω and 5 kΩ ranges, two types of calibration are required because of differences of current (excitation current) inflowing from an external device.

L 500 Ω, 1 mA L 5 kΩ, 0.1 mA	Calibration with the resistance measurement range of a digital multimeter is possible. During calibration, make sure the resistance measurement current is the current value shown on the left.
H 500 Ω, 5 mA H 5 kΩ, 0.5 mA	Apply the current shown on the left from an external device as shown in connection diagram <4> and then measure the voltage drop and perform calibration.

Tip

- You can select to calibrate just the functions and ranges that require calibration. (Be sure to perform both zero point and full scale (FS) calibration of the same range together.)
- Calibration of thermocouple (TC) and resistance temperature detector (RTD) takes place at the same time as calibration of the100 mV and 500 Ω ranges.

(2) Connection Diagrams

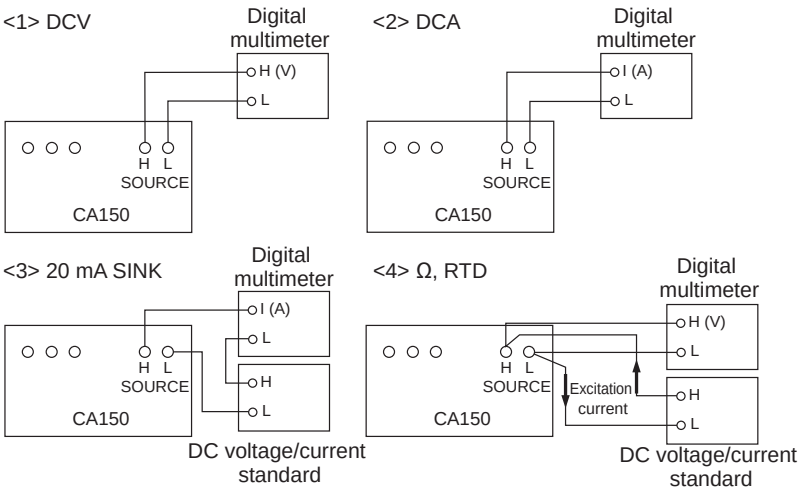

(3) Calibration Procedure

Connect the instrument in accordance with the function and range to be calibrated. Refer to "(2) Connection Diagrams."

1. Simultaneously press the CLEAR and ENTER keys to switch to setting mode.
2. Use the ▲ ▼ key to select source (SEt SrC).
3. Press the ENTER key to confirm the selection.
4. Use the ▲ ▼ key to select the calibration (SrC CAL) setting.
5. Press the ENTER key to confirm the selection.
6. Use the FUNCTION and RANGE keys to set the range to calibrate. (The output full scale value of the selected range appears on the bottom row.)
7. Press the ENTER key to confirm the setting.
8. Start zero-point calibration:
   The CAL and ZERO segments light, the output setting value of the instrument appears on the bottom row, and the zero point calibration value of the selected range appears on the top row.

9 Use the SOURCE ON/OFF key to turn on the output.
Use the ▲ ▼ output keys of the instrument to set the output value so that the value read by the multimeter connected to the instrument matches the zero point calibration value displayed on the top row.

10 When calibration is complete, press the ENTER key to confirm the calibration value.

11 Start full scale point calibration:
The CAL and FS segments light, the output setting value of the instrument appears on the bottom row, and the full scale point calibration value of the selected range appears on the top row.

12 Use the ▲ ▼ output keys of the instrument to set the output value so that the value read by the multimeter connected to the instrument matches the full scale point calibration value displayed on the top row.

13 When calibration is complete, press the ENTER key to confirm the calibration value.
The calibration values of the range are calculated and saved to internal memory. (The values overwrite the previous calibration data.)
To cancel calibration, press the CLEAR key before pressing the ENTER key. The procedure returns to Step 6.

14 Repeat Steps 6 to 13 for each range to be calibrated.

When calibrating the 500 Ω and 5 kΩ ranges of resistance (Ω), two types (L and H) of calibration are required because of differences of excitation current.

Cancel:
To return to the calibration range selection display in Step 6, press the CLEAR key.

End:
To end calibration mode, simultaneously press the CLEAR and ENTER keys. Normal (source/measurement) mode returns.

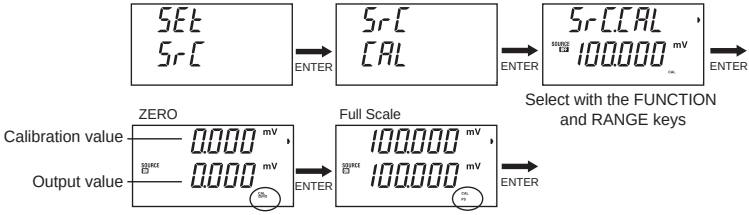

9.2 Calibration of Measurement Functions (Adjustment)

(1) Calibration Points and Calibration Ranges

Enter the following calibration values from the standard device.

Function	Range	Calibration Point		Condition	Connection Diagram
		ZERO	Full Scale		
DCV	500 mV	0 mV	500.00 mV -500.00 mV	—	<5>
	5 V	0 V	5.0000 V -5.0000 V	—	
	35 V	0 V	30.00 V -30.00 V	—	
DCA	20 mA	0 mA	20.000 mA -20.000 mA	—	<6>
	100 mA	0 mA	100.00mA -100.00mA	—	
Ω	500 Ω	0 Ω	500.00 Ω	3 W (3-wire) Input	<7>
	5 kΩ	0 Ω	5.0000 kΩ		
	50 kΩ	0 Ω	50.000 kΩ		

Tip

You can select to calibrate just the functions and ranges that require calibration.
(Be sure to perform both zero point and full scale (+FS/-FS) calibration of the same range together.)

(2) Connection Diagrams

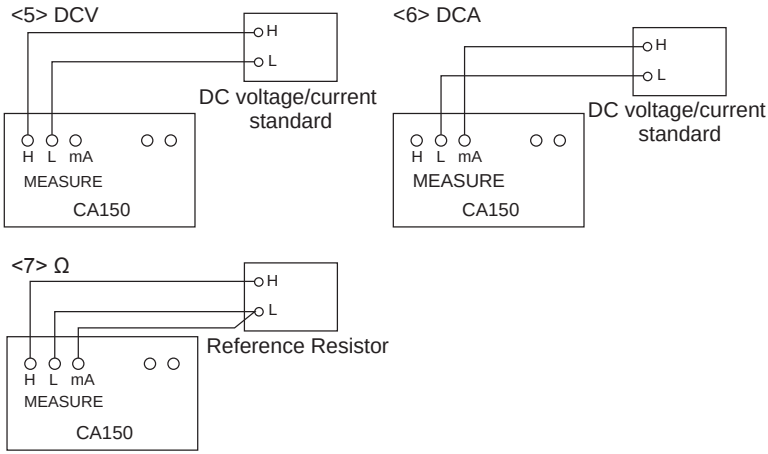

(3) Calibration Procedure

Connect the instrument in accordance with the function and range to be calibrated. Refer to "(2) Connection Diagrams."

1 Simultaneously press the CLEAR and ENTER keys to switch to setting mode.
2 Use the ▲ ▼ key to select measure (SEt MEAS).
3 Press the ENTER key to confirm the selection.
4 Use the ▲ ▼ key to select the calibration (MEAS CAL) setting.
5 Press the ENTER key to confirm the selection.
6 Use the FUNCTION and RANGE keys to set the range to calibrate. (The + side measurement full scale value of the selected range appears on the bottom row.)
7 Press the ENTER key to confirm the setting.
8 Start zero-point calibration:
The CAL and ZERO segments light, the input measurement value appears on the top row, and the zero point calibration value of the selected range appears on the bottom row.
9 Input the calibration value displayed on the bottom row into the instrument from the standard generator.
When the input value stabilizes,
press the ENTER key to confirm the calibration value.

10 Start +FS point calibration:
The CAL and FS segments light, the input measurement value appears on the top row, and the + side full scale calibration value of the selected range appears on the bottom row.

11 Input the calibration value displayed on the bottom row into the instrument from the standard generator.
When the input value stabilizes,
press the ENTER key to confirm the calibration value.

12 Start -FS point calibration:
The CAL and FS segments light, the input measurement value appears on the top row, and the - side full scale calibration value of the selected range appears on the bottom row.

13 Input the calibration value displayed on the bottom row into the instrument from the standard generator.
When the input value stabilizes,
press the ENTER key to confirm the calibration value.
The calibration values of the range are calculated and saved to internal memory. (The values overwrite the previous calibration data.)
To cancel calibration, press the CLEAR key before pressing the ENTER key. The procedure returns to Step 6.

14 Repeat Steps 6 to 13 for each range to be calibrated.

Set the calibration value of each calibration point based on the reading on the standard generator side.
The measurement value displayed on the top row of the screen of the instrument is the reference value that was measured based on the calibration value already saved.

Cancel:
To return to the calibration range selection display in Step 6, press the CLEAR key.

End:
To end calibration mode, simultaneously press the CLEAR and ENTER keys. Normal (source/measurement) mode returns.

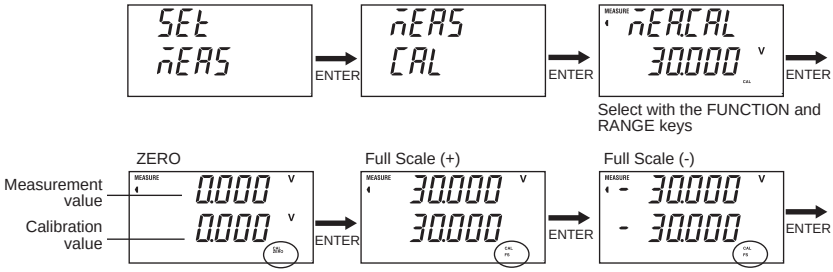

9.3 Verification after Calibration

After calibration is complete, verify that the instrument was calibrated correctly and that the calibration values were written to memory.

Verification Procedure

After calibration is complete, turn off the power.
Turn the power back on and verify generation and measurement in normal mode (not calibration mode).
Use the standard device used for calibration.
(Check the calibration points.)

9.4 Calibration of Temperature Ranges

Calibrating thermocouple (TC) ranges for temperature measurement involves using special equipment for calibrating the RJ sensor (reference junction compensation).

10. Troubleshooting

10.1 Troubleshooting Checklist

If the instrument will still not operate normally after checking the following items or if you notice a problem not listed, contact the dealer from whom you purchased the instrument.

Problem	Corrective Action
Nothing appears on the LCD even when the power is turned on.	When Running On Batteries • Are the batteries attached properly? • Have the batteries run out of power? • Is the plug of the AC adapter inserted in the instrument but the AC adapter is not connected to an AC power supply (outlet)? When Using an AC Adapter • Is the AC adapter being reliably supplied with power?
Measurement values are not displayed. (Source values and other indications are displayed normally.)	Is MEASURE ON/OFF indicated as being in the OFF state?
Source remains off even if SOURCE ON (output) is operated.	• When the instrument is in voltage (DCV) generation, is the load current exceeding the specified value? • When the instrument is in current (DCA) generation, is the load resistance too large?
Source cannot be turned on with SOURCE ON (output) or nothing is generated even if source is turned on.	• If an abnormal voltage (current) is applied to the output terminals, the built-in protection fuse may blow. If it does, the instrument needs to be repaired. (This fuse is different from the one described in "3.2.4 Fuse.")
Source and measurement values are abnormal.	• Are they affected by noise? • When the instrument is in resistance (V, RTD) generation, is the capacitor in the input of the device under test large (0.01 μF or larger)?
The instrument cannot be controlled by communication via the RS232 interface.	• Are the communication settings configured properly?
The hold function for measurement does not work.	• Is "Print" set for communication in setting mode? (The communication output state is indicated by the flashing of REMOTE.)
Err 79 or Err 80 appears at power on.	• The instrument needs to be repaired.

11. Specifications

Source

Accuracy = ± (% of setting + µV, mV, µA, Ω, °C, CPM, Hz, kHz) at 23±5°C

	Range	Source Range	Accuracy	Setting Resolution	Remarks
DCV source	100 mV	0 to ±110.000 mV	±(0.02% +10 µV)	1 µV	Output resistance: Approx. 6.5 Ω
	1 V	0 to ±1.10000 V	±(0.02% +0.05 mV)	10 µV	Maximum output: 10 mA Output resistance: Approx. 30 mΩ
	10 V	0 to ±11.0000 V	±(0.02% +0.5 mV)	0.1 mV	Maximum output: 10 mA Output resistance: Approx. 30 mΩ
	30 V	0 to ±30.00 V	±(0.02% +10 mV)	10 mV	Maximum output: 10 mA
DCmA source	20 mA	0 to +22.000 mA	±(0.025% +3 µA)	1 µA	Maximum load: 24 V
mA SINK	20 mA SINK	0 to -22.000 mA	±(0.025% +6 µA)	1 µA	External power supply: 5 to 28 V
Resistance source	500 Ω	0 to 550.00 Ω	±(0.02% +0.1 Ω)	0.01 Ω	Excitation current: 1 to 5 mA*2 or maximum output: 2V
	5 kΩ	0 to 5.5000 kΩ	±(0.05% +1.5 Ω)	0.1 Ω	Excitation current: 0.1 to 0.5 mA or maximum output: 2V
	50 kΩ	0 to 55.000 kΩ	±(0.1% +50 Ω)	1 Ω	Excitation current: 0.01 to 0.1 mA or maximum output: 2V
RTD output *1	PT 100 JPT 100	- 200.0 to 850.0 °C - 200.0 to 500.0 °C	±(0.025% +0.3 °C)	0.1 °C	Excitation current: 1 to 5 mA*2
TC output *1 *3	K	-200.0 to 1372.0 °C	±(0.02% +0.5 °C) However, -200.0 to -100.0 °C ±(0.02% +0.8 °C)	0.1 °C	*3 TC source accuracy does not include RJ sensor accuracy. RJ Sensor Specification Measurement range: -10 to 50 °C Accuracy (when combined with main unit) 18 to 28 °C: ±0.5 °C Other than 18 to 28°C: ±1 °C
	E	-200.0 to 1000.0 °C	±(0.02% +0.4 °C) However, -200.0 to -100.0 °C ±(0.02% +0.6 °C)		
	J	-200.0 to 1200.0 °C	±(0.02% +0.4 °C) However, -200.0 to -100.0 °C ±(0.02% +0.7 °C)		
	T	-200.0 to 400.0 °C	±(0.02% +0.5 °C) However, -200.0 to -100.0 °C ±(0.02% +0.8 °C)		
	N	-200.0 to 1300.0 °C	±(0.02% +0.5 °C) However, -200.0 to 0 °C ±(0.02% +1.0 °C)		
	L	-200.0 to 900.0 °C	±(0.02% +0.5 °C)		
	U	-200.0 to 400.0 °C	±(0.02% +0.5 °C) However, -200.0 to 0 °C ±(0.02% +0.7 °C)		

	Range	Source Range	Accuracy	Setting Resolution	Remarks
TC output *1 *3	R	0 to 1768 °C	±(0.02% +1.2 °C) However, 0 to 100 °C ±(0.02% +2 °C)	1 °C	*3 TC source accuracy does not include RJ sensor accuracy. RJ Sensor Specification Measurement range: -10 to 50 °C Accuracy (when combined with main unit) 18 to 28 °C: ±0.5 °C Other than 18 to 28 °C: ±1 °C
	S	0 to 1768 °C	±(0.02% +1.2 °C) However, 0 to 100 °C ±(0.02% +2 °C)		
	B	600 to 1820 °C	±(0.02% +1 °C) However, 600 to 1000 °C ±(0.02% +1.5 °C)		
Pulse output	CPM	1.0 to 1100.0 CPM	±0.5 CPM	0.1 CPM	Output voltage (+0.1 V to +11 V) ±10% (zero base waveform) Maximum load current: 10 mA Pulse number Continuous, 1 to 60,000 cycles
	100 Hz	1.00 to 110.00 Hz	±0.05 Hz	0.01 Hz	
	1000 Hz	90.0 to 1100.0 Hz	±0.5 Hz	0.1 Hz	
	10 kHz	0.9 kHz to 11.0 kHz	±0.1 kHz	0.1 kHz	
	50 kHz	9 kHz to 50 kHz	±1 kHz	1 kHz	

Temperature coefficient: When in the ranges of 0≤T<18°C and 28<T≤40°C,
add the accuracy shown above ×(1/10)/°C.
The above accuracy ranges are for values obtained
when the instrument has been left for two hours after charging ends (or is stopped).
*1: ITS-90 or IPTS-68 can be set with the internal settings.
*2: Excitation current Is: When less than 0.1 mA to 1 mA,
then add {0.05/Is (mA)} (Ω) or {0.12/Is (mA)} (°C).

About Accuracy during Charging

Accuracy is affected by the heat generated during charging or immediately
after charging ends (is stopped).
Refer to the accuracy values shown in "Source during Charging" on the next page.

Source during Charging

Accuracy = ± (% of setting + µV, mV, µA, Ω, °C) at 23±5°C

	Range	Source Range	Accuracy	Setting Resolution	Remarks
DCV source	100 mV	0 to ±110.000 mV	±(0.04% +25 µV)	1 µV	Output resistance: Approx. 6.5 Ω
	1 V	0 to ±1.10000 V	±(0.035% +0.1 mV)	10 µV	Maximum output: 10 mA Output resistance: Approx. 30 mΩ
	10 V	0 to ±11.0000 V	±(0.035% +1 mV)	0.1 mV	Maximum output: 10 mA Output resistance: Approx. 30 mΩ
	30 V	0 to ±30.00 V	±(0.035% +20 mV)	10 mV	Maximum output: 10 mA
DCmA source	20 mA	0 to +22.000 µA	±(0.04% +7 µA)	1 µA	Maximum load: 24 V
mA SINK	20 mA SINK	0 to -22.000 µA	±(0.045% +10 µA)	1 µA	External power supply: 5 to 28 V
Resistance source	500 Ω	0 to 550.00 Ω	±(0.035% +0.5 Ω)	0.01 Ω	Excitation current: 1 to 5 mA*2 or maximum output: 2V
	5 kΩ	0 to 5.5000 kΩ	±(0.065% +5 Ω)	0.1 Ω	Excitation current: 0.1 to 0.5 mA or maximum output: 2V
	50 kΩ	0 to 55.000 kΩ	±(0.12% +150 Ω)	1 Ω	Excitation current: 0.01 to 0.1 mA or maximum output: 2V
RTD output *1	PT 100 JPT 100	- 200.0 to 850.0 °C - 200.0 to 500.0 °C	±(0.075% +0.6 °C)	0.1 °C	Excitation current: 1 to 5 mA*2
TC output *1 *3	K	-200.0 to 1372.0 °C	±(0.03% +0.8 °C) However, -200.0 to -100.0 °C ±(0.03% +1.0 °C)	0.1 °C	*3 TC source accuracy does not include RJ sensor accuracy. RJ Sensor Specification Measurement range: -10 to 50 °C Accuracy (when combined with main unit) 18 to 28 °C: ±0.5 °C Other than 18 to 28 °C: ±1 °C
	E	-200.0 to 1000.0 °C	±(0.03% +0.8 °C) However, -200.0 to -100.0 °C ±(0.03% +1.0 °C)		
	J	-200.0 to 1200.0 °C	±(0.03% +0.8 °C) However, -200.0 to -100.0 °C ±(0.03% +1.0 °C)		
	T	-200.0 to 400.0 °C	±(0.03% +0.9 °C)		
	N	-200.0 to 1300.0 °C	±(0.03% +1.0 °C) However, -200.0 to -100.0 °C ±(0.03% +1.7 °C)		
	L	-200.0 to 900.0 °C	±(0.03% +0.8 °C)		
	U	-200.0 to 400.0 °C	±(0.03% +0.6 °C) However, -200.0 to 0 °C ±(0.03% +1.2 °C)		
	R	0 to 1768 °C	±(0.03% +2 °C) However, 0 to 100 °C ±(0.03% +3.5 °C)	1 °C	
	S	0 to 1768 °C	±(0.03% +2 °C) However, 0 to 100 °C ±(0.03% +3.5 °C)		
	B	600 to 1820 °C	±(0.03% +2 °C) However, 600 to 1000 °C ±(0.03% +2.8 °C)		

Temperature coefficient: Add the accuracy in normal state ×(1/10)°C.

Measurement

Accuracy = ± (% of reading + µV, mV, µA, Ω, dgt, °C) at 23±5°C

	Range	Measurement Range	Accuracy	Resolution	Remarks
DCV measurement	500 mV	0 to ±500.000 mV	±(0.02% + 50 µV)	10 µV	Input resistance: 1000 MΩ or greater.
	5 V	0 to ±5.0000 V	±(0.02% + 0.5 mV)	0.1 mV	Input resistance: Approx. 1 MΩ
	35 V	0 to ±35.000 V	±(0.025% + 5 mV)	1 mV	
DCmA measurement	20 mA	0 to ±20.000 mA	±(0.025% + 4 µA)	1 µA	Input resistance: Approx. 20 Ω or less
	100 mA	0 to ±100.00 mA	±(0.04% + 30 µA)	10 µA	
Resistance measurement *4	500 Ω	0 to 500.00 Ω	±(0.055% + 0.075 Ω)	0.01 Ω	Measurement current: Approx. 1 mA
	5 kΩ	0 to 5.0000 kΩ	±(0.055% + 0.75 Ω)	0.1 Ω	Measurement current: Approx. 100 µA
	50 kΩ	0 to 50.000 kΩ	±(0.055% + 10 Ω)	1 Ω	Measurement current: Approx. 10 µA
Pulse measurement	100 Hz 1000 Hz 10 kHz	1.00 to 110.00 Hz 1.0 to 1100.0 Hz 0.001 to 11.000 kHz	±2 dgt	0.01 Hz 0.1 Hz 0.001 kHz	Maximum input: 30 Vpeak Sensitivity: 0.5 Vp-p or greater Input resistance: Approx. 100 kΩ Contact input: Max. 100 Hz
	CPM CPH	0 to 100000 CPM 0 to 100000 CPH	— —	1 CPM 1 CPH	
TC input	K E J T N L U	-200.0 to 1372.0 °C -200.0 to 1000.0 °C -200.0 to 1200.0 °C -200.0 to 400.0 °C -200.0 to 1300.0 °C -200.0 to 900.0 °C -200.0 to 400.0 °C	±(0.05% + 1.5 °C) / -100.0 °C or more ±(0.05% + 2 °C) / -100.0 °C or less	0.1 °C	*5
	R S	0 to 1768 °C 0 to 1768 °C	±(0.05% + 2 °C) / 100 °C or more ±(0.05% + 3 °C) / 100 °C or less	1 °C	
	B	600 to 1820 °C	±(0.05% + 2 °C) However, 600 to 1000 °C ±(0.05% + 3 °C)		
RTD input *4	PT100 JPT100	-200.0 to 850.0 °C -200.0 to 500.0 °C	±(0.05% + 0.6 °C)	0.1 °C	—
Loop power supply	—	—	24 V ±2 V	—	Maximum current: 22 mA

Temperature coefficient: When in the ranges of 0≤T<18°C and 28<T≤40°C, add the accuracy shown above ×(1/10)/°C.
The above accuracy ranges are for values obtained after the instrument has been left for two hours after charging ends (or is stopped).

*4: When using three-wire method (3W).

*5: In the case of a load during source output, accuracy can be affected by internal heat. Add as a coefficient the temperature of the part of the value obtained with the temperature monitor function that exceeds 23±5°C.
(The temperature monitor function is a function for displaying the temperature measured with the built-in RJ sensor.)

About Accuracy during Charging

Accuracy is affected by the internal heat during charging or immediately after charging ends (is stopped). Refer to the accuracy values shown in "Measurement during Charging" on the next page.

Measurement during Charging

Accuracy = ± (% of reading + mV, µA, Ω, °C) at 23±5°C

	Range	Measurement Range	Accuracy	Resolution	Remarks
DCV measurement	500 mV	0 to ±500.000 mV	±(0.035% +0.1 mV)	10 µV	Input resistance: 1000 MΩ or greater.
	5 V	0 to ±5.0000 V	±(0.035% +1 mV)	0.1 mV	Input resistance: Approx. 1 MΩ
	35 V	0 to ±35.000 V	±(0.025% +7 mV)	1 mV	
DCmA measurement	20 mA	0 to ±20.000 mA	±(0.04% +6 µA)	1 µA	Input resistance: Approx. 20 Ω or less
	100 mA	0 to ±100.00 mA	±(0.055% + 40 µA)	10 µA	
Resistance measurement *4	500 Ω	0 to 500.00 Ω	±(0.09% +0.15 Ω)	0.01 Ω	Measurement current: Approx. 1 mA
	5 kΩ	0 to 5.0000 kΩ	±(0.09% +1.5 Ω)	0.1 Ω	Measurement current: Approx. 100 µA
	50 kΩ	0 to 50.000 kΩ	±(0.09% +20 Ω)	1 Ω	Measurement current: Approx. 10 µA
TC input	K E J T N L U	-200.0 to 1372.0 °C -200.0 to 1000.0 °C -200.0 to 1200.0 °C -200.0 to 400.0 °C -200.0 to 1300.0 °C -200.0 to 900.0 °C -200.0 to 400.0 °C	*6	0.1 °C	*5
	R S B	0 to 1768 °C 0 to 1768 °C 600 to 1820 °C	*6	1 °C	
RTD input *4	PT100 JPT100	-200.0 to 850.0 °C -200.0 to 500.0 °C	±(0.09% + 1.2 °C)	0.1 °C	—

Temperature coefficient: Add the accuracy in normal state ×(1/10)°C.

*6: When the temperature measured with the temperature monitor function is in the ranges of 0≤T<18°C and 28<T≤40°C, add the accuracy in the normal state ×(1/10)/°C as a temperature coefficient, which is obtained from the temperature of the part exceeding 23±5°C.

General and Common Specifications

Source unit response time: 300 msec
(time from start of voltage change to when voltage enters accuracy range)
However, the time is 5 msec for 1 V, 10 V, 500 Ω
(excitation current: 1 mA), and RTD (excitation current: 1 mA) ranges
Source unit voltage limiter: Approximately 32 V
Source unit current limiter: Approximately 25 mA
Switching of output polarity: ＋ ←→ －
Load condition: 0.01 μF or less (DCV, Ω, TC, RTD, PULSE)
100 μH or less (DCA)
Divided output (n/m) function: Output = setting value × (n/m)
where n = 0 to m and m = 1 to 19
Step sweep function: The n value is sent automatically
when the n/m function is selected.
The interval time is approximately 5 seconds/
10 seconds
Linear sweep function: The sweep time is approximately 16 seconds/
32 seconds
Memory function:
1) Setting:
Up to 21 settings for startup such as the function and
range can be saved from the setting screen.
At startup, it is possible to select initial settings or switch output.
2) Data:
100 items of data can be saved
(sets of items such as date, source function, range, source value,
measurement function, range, and measurement value)
Multiple data can be continuously output
(program sweep function)
Loop check function
(current can be measured while supplying 24 V with two wires)

Measurement unit maximum input:Voltage terminal:
42 V DC, Current terminal: 120 mA
Current terminal input protection: Fuse: 125 mA/250 V
Measurement display update rate: Approximately once per second
CMRR: Approximately 120 dB (50/60 Hz)
NMRR: Approximately 60 dB (50/60 Hz)

Serial interface: RS232
Display: Segmented LCD
Backlight: LED backlight, auto off after 10 minutes
Warm-up time: Approximately 5 minutes
Power supply:
Six AA-size alkaline batteries
Dedicated NiMH battery or dedicated AC adapter (optional)
The charging time is approximately 6 hours.

Battery life:
When measurement is on and output is 5 V DC/10 kΩ or greater:
Approximately 8 hours for alkaline batteries and
10 hours for the dedicated NiMH battery

Auto power off: Approximately 10 minutes (can be disabled)
Insulation resistance: 50 MΩ or more at 500 V DC between the input terminals and output terminals
Withstanding voltage: 350 V AC for 1 minute between the measurement terminals and source terminals

Operating temperature/humidity ranges:
0 to 40°C, 20 to 80% RH (no condensation)
Storage temperature/humidity ranges:
-20 to 60°C, 90% RH or less (no condensation)
Dimensions: Approximately 251 × 124 × 70 mm
Weight: Approximately 1000 g (including batteries)
Accessories:
Source lead cables, measurement lead cables,
carrying case, fuse (spare), terminal adapter, alkaline batteries (six),
user's manual, ferrite core (two).

Safety standards:
EN 61010-1, EN 61010-2-030
Measurement category O (Other)
Indoor use, altitude 2000 m or less,
pollution degree 2

Power supply: Optional electrical supply (AC Adapter)
12V DC, 20W max.
UL61010-1
CAN/CSA C22.2 No.61010-1

EMC standards: EN 61326-1 Class B,
EN 61000-3-2, EN 61000-3-3, EN 55011 Class B, Group 1
EMC Regulatory Arrangement in Australia and New Zealand
EN 55011 Class B, Group 1
Korea Electromagnetic Conformity Standard
(한국 전자파적합성기준)

Measurement error may temporarily occur under immunity environments.

Conditions of EMC:
Use an AC adapter (94010), an RJ sensor, RS232 cable (Shielded cable, less than 30 m) and the included lead cable. For the lead cable, wind a designated ferrite core (A1193MN) two turns toward the main body of the instrument.

For details on ferrite core, refer to “Appendix 3.”
Measurement error may temporarily occur under immunity environments.

Environmental standard: EN 50581
Monitoring and control instruments including industrial monitoring and control instruments

External Dimensions

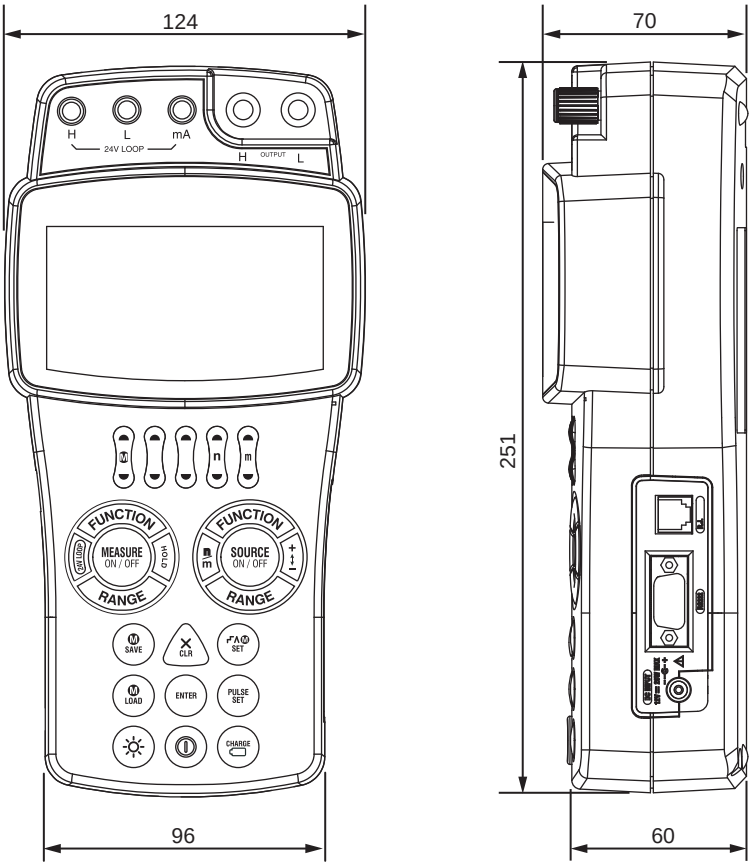

Unit: mm

12. Sales in Each Country or Region

12.1 Disposing the Product

Waste Electrical and Electronic Equipment (WEEE), Directive
(This directive is valid only in the EU.)
This product complies with the WEEE directive marking requirement.
This marking indicates that you must not discard this electrical/electronic product in domestic household waste.

Product Category
With reference to the equipment types in the WEEE directive,
this product is classified as a "Monitoring and control instruments" product.
When disposing products in the EU, contact your local
Yokogawa Europe B.V. office.
Do not dispose in domestic household waste.

12.2 How to Replace and Dispose the Batteries

EU Battery Directive
(This directive is valid only in the EU.)
Batteries are included in this product.

<1> Alkaline dry cell, Nickel-Hydrogen Battery Pack
When you remove batteries from this product and dispose them, discard them in accordance with domestic law concerning disposal.
Take a right action on waste batteries, because the collection system in the EU on waste batteries are regulated.
Battery type: Alkaline dry cell
NiMH (Nickel-Hydrogen) Battery
[Capacity: **1900 mAh (min.)**, 2100 mAh (typ.)]
Notice:
This marking indicates they shall be sorted out and collected as ordained in the EU battery directive.

How to remove batteries safely:
For further details, see "3.2.1Using Alkaline Batteries" and "3.2.3 Using an NiMH Battery Pack" in the User's Manual.

<2> Lithium Battery
You cannot replace batteries by yourself.
When you need to replace batteries, contact your local Yokogawa Europe B. V. office.

Battery type: Lithium Battery

12.3 Authorized Representative in the EEA

Yokogawa Europe B.V. is the authorized representative of Yokogawa Test & Measurement Corporation for this product in the EEA.
(EEA: European Economic Area)

To contact Yokogawa Europe B.V., see the separate list of worldwide contacts, PIM 113-01Z2.

12.4 For the Pollution Control of Electronic and Electrical Products of the People's Republic of China

They are applicable only in China.

产品中有害物质的名称及含量

部件名称	有害物质					
	铅 （Pb）	汞 （Hg）	镉 （Cd）	六价铬 （Cr （VI））	多溴联苯 （PBB）	多溴二苯醚 （PBDE）
框架（塑料）	×	○	○	○	○	○
线路板 ASSY	×	○	○	○	○	○
导线	×	○	○	○	○	○
电池	×	○	○	○	○	○
＜选购＞						
RJC CABLE B9108 WA	×	○	○	○	○	○
AC 适配器 94010	×	○	○	○	○	○
NiMH 电池 94015	×	○	○	○	○	○

○ ：表示该有害物质在该部件所有均质材料中的含量均在 GB/T 26572 规定的限量要求以下。

× ：表示该有害物质至少在该部件的某一均质材料中的含量超出 GB/T 26572 规定的限量要求。

环保使用期限：

该标识适用于 SJ/T 11364 中所述，在中华人民共和国销售的电子电气产品的环保使用期限。
只要您遵守该产品相关的安全及使用注意事项，在自制造日起算的年限内，
则不会因产品中有害物质泄漏或突发变异，而造成对环境的污染或对人体及财产产生恶劣影响。

注）
该年数为“环保使用期限”，并非产品的质量保证期。
零件更换的推荐周期，请参照使用说明书。

Appendix 1 Using a Cold Junction Compensator

Standard thermocouple tables give 0°C as the temperature of the reference junction. Normally, the input terminal part (reference junction) of a thermometer (device under calibration) is at room temperature.
(This results in an error equivalent to the difference between 0°C and room temperature.)
Cold junction compensation involves measuring (detecting) the temperature of the reference junction, calculating the temperature difference (thermoelectric power difference) from 0°C, and then carrying out compensation based on the result.
Use an external RJ sensor (or the built-in RJ sensor) for measuring (detecting) the temperature of the reference junction.

A cold junction compensator can be used when, for example, it is not possible to use an RJ sensor.
The use of a cold junction compensator enables the reference junction to be 0°C.

Cold junction compensator: YOKOGAWA T-MJ or the equivalent

Connecting a Cold Junction Compensator

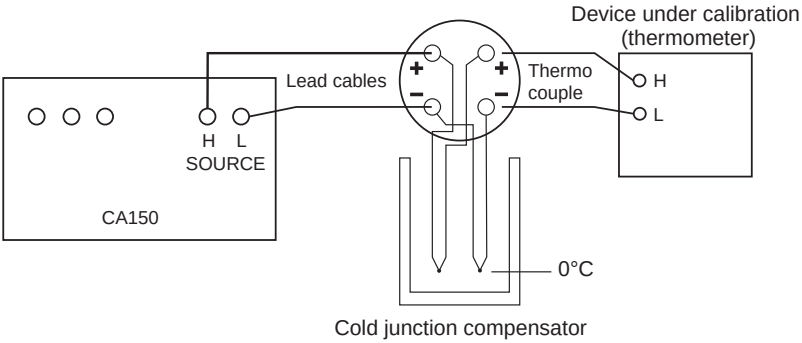

Appendix 2 Block Diagram

■ Block Diagram

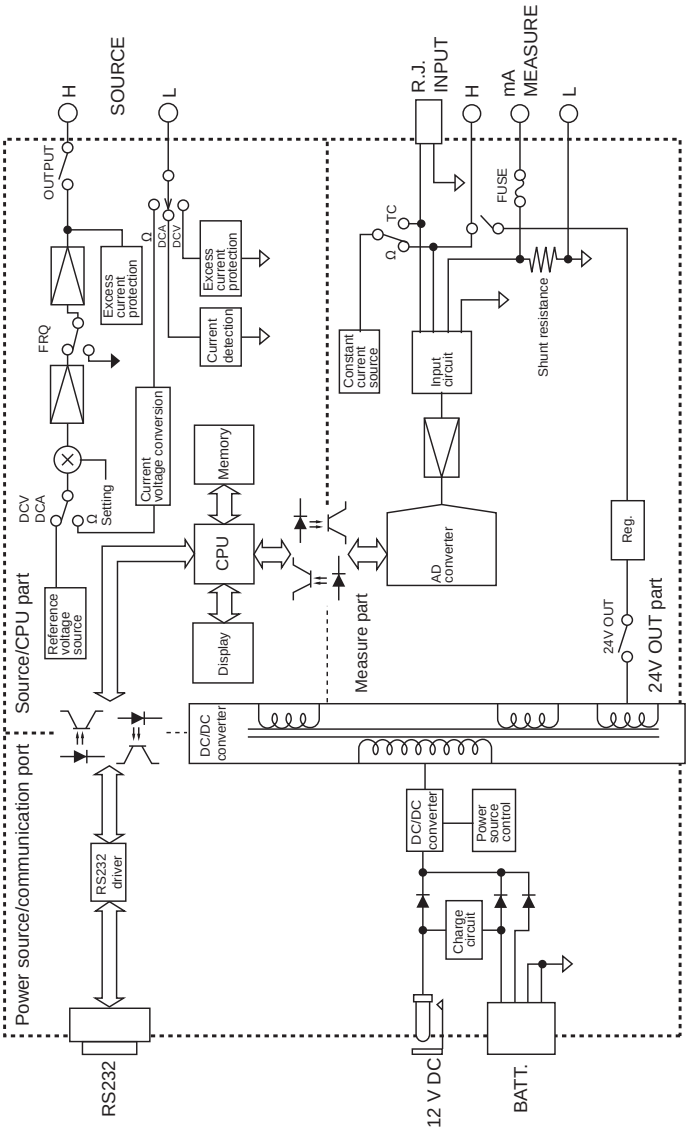

Appendix 3 Installing Ferrite Core

⚠ CAUTION
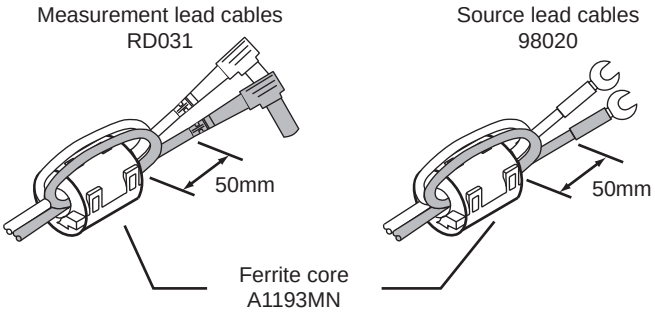
To comply with the EMC Directive, install the included ferrite cores on the lead cables as shown below (in a three-wire output system, the third source lead cable [black] must also be equipped with a ferrite core).